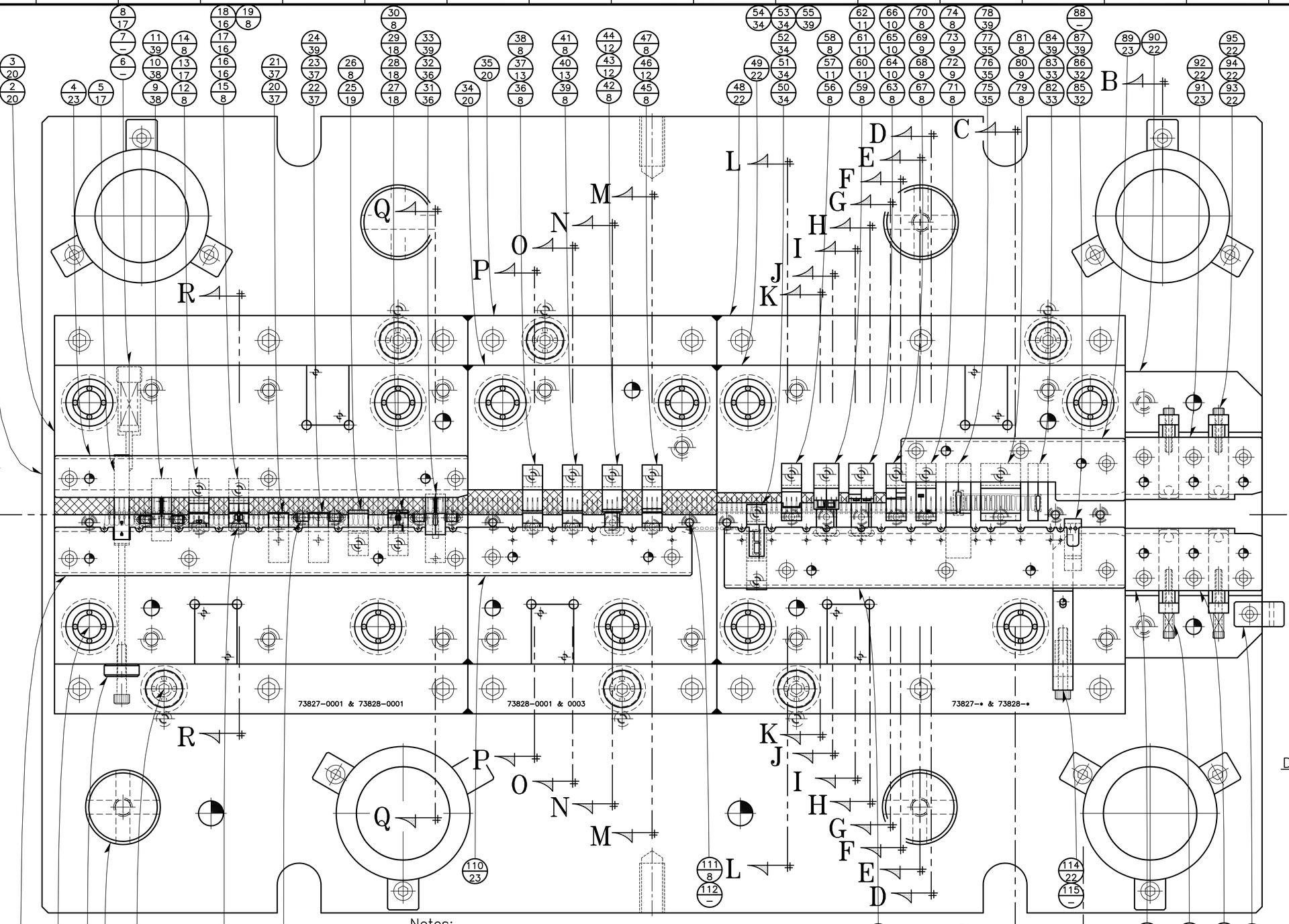

Notes:

1. Material = .015" Thk. x .780" Wide #827 & 828–0001
   Material = .015" Thk. x 1.016" Wide #827 & 828–0003
   Copper Alloy, C663 Extra Hard
2. Multiple = .100"
3. Punch & Die = .0007 Per Side.
4. Punch & Stripper Face = .0002 Per Side.
5. Land = 090" Straight, 1/4° Taper Per Side.

Die Set Data

1. Lempco
2. LR = 24.5" FB = 16"
3. DH = 1 1/2" PH = 1 1/2"
4. Post = 1 1/2"ø Cat.#956–1226
5. Bushing = Cat.#963–1216
6. Min. Shut Hgt. = 6.87" Stroke = ?
7. Cage = Rotainer, Cat.#361–1215

Advanced Designs, Inc.
Powers Lake, Wis.

CUST. **Your Customer**

CAD FILE:	CONTACT–1	DATE	SHT. NO. 1 of 43
DRAWN BY:	M. Dennis	05–17–08	
CHECKED:	M. Dennis	05–17–08	SCALE 1 = 1
APPROVED:	–	02–01–06	
PART NO.	87654321		TOOL NO. 05–500
PART NAME	Contact, Changeover		

www.diedesigner.com

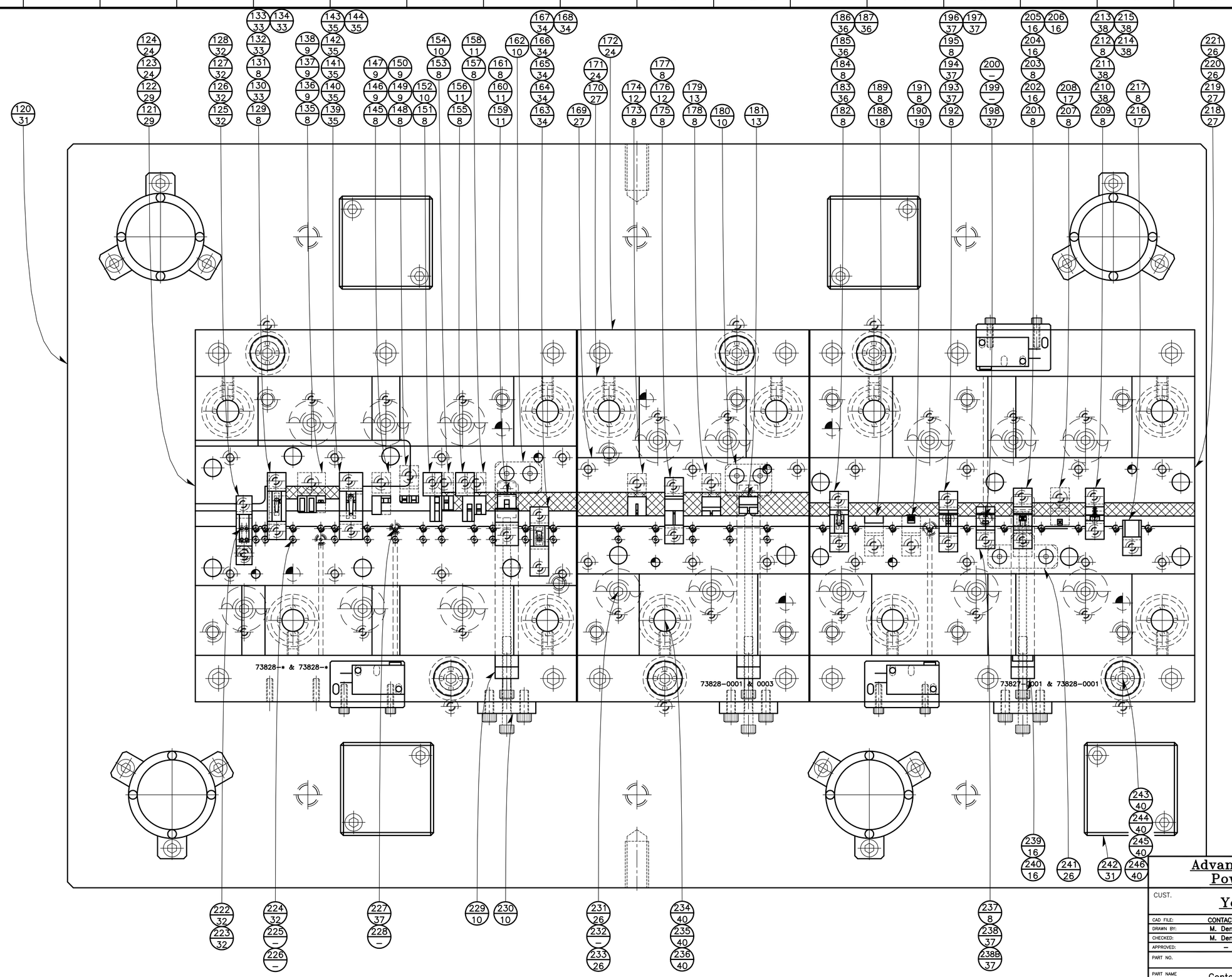

Advanced Designs, Inc.	
Powers Lake, Wis.	
CUST.	**Your Customer**
CAD FILE: CONTACT-2	DATE
DRAWN BY: M. Dennis	05-17-08
CHECKED: M. Dennis	05-17-08
APPROVED: –	02-01-06
SHT. NO. 2 of 43	
SCALE 1 = 1	
PART NO. 87654321	TOOL NO. 05-500
PART NAME Contact, Changeover	

www.diedesigner.com

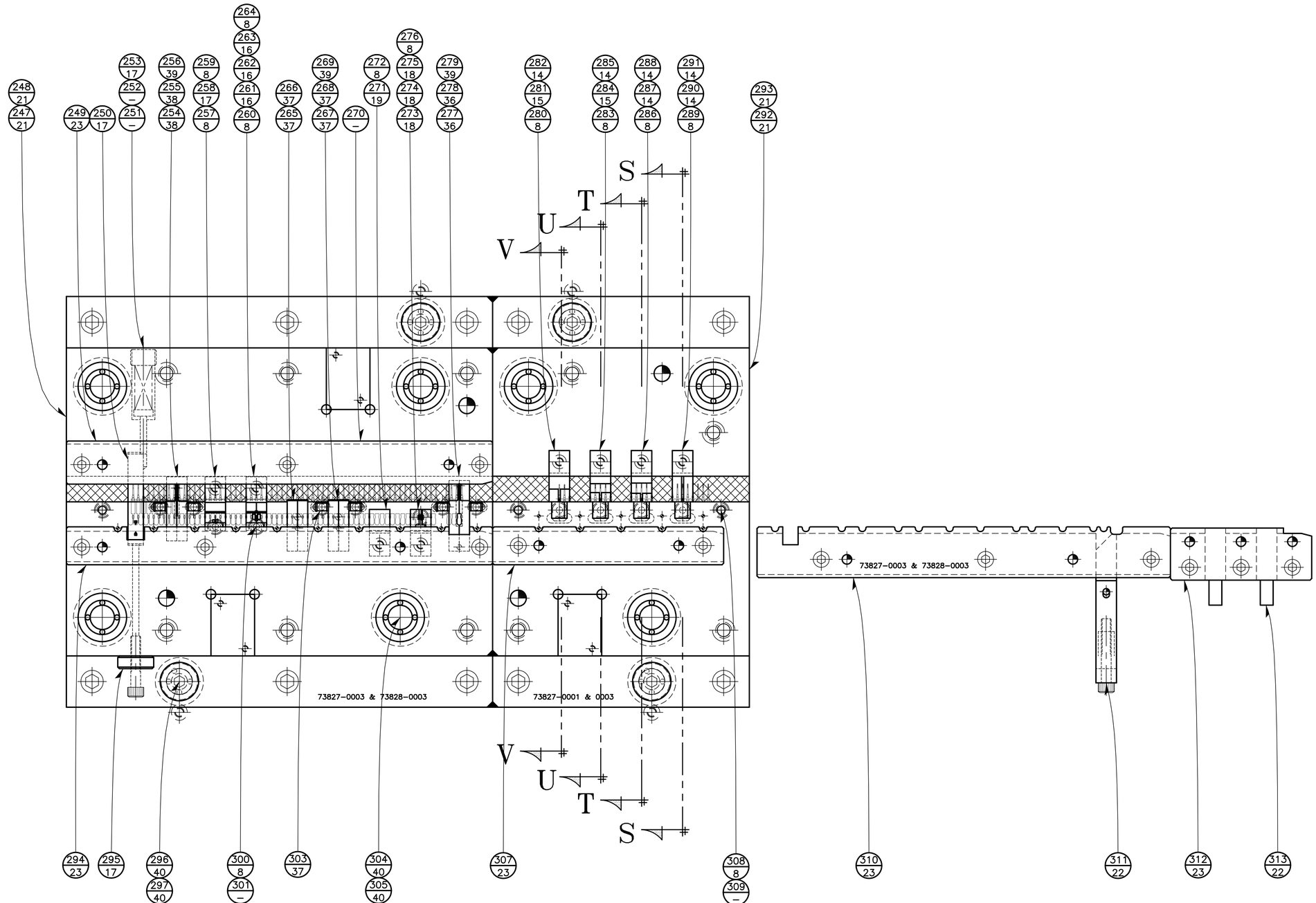

Advanced Designs, Inc.	
Powers Lake, Wis.	
CUST.	Your Customer
CAD FILE: CONTACT–3	DATE
DRAWN BY: M. Dennis	05–17–08
CHECKED: M. Dennis	05–17–08
APPROVED: –	02–01–06
SHT. NO.	3 of 43
SCALE	1 = 1
PART NO.	87654321
TOOL NO.	05–500
PART NAME	Contact, Changeover

www.diedesigner.com

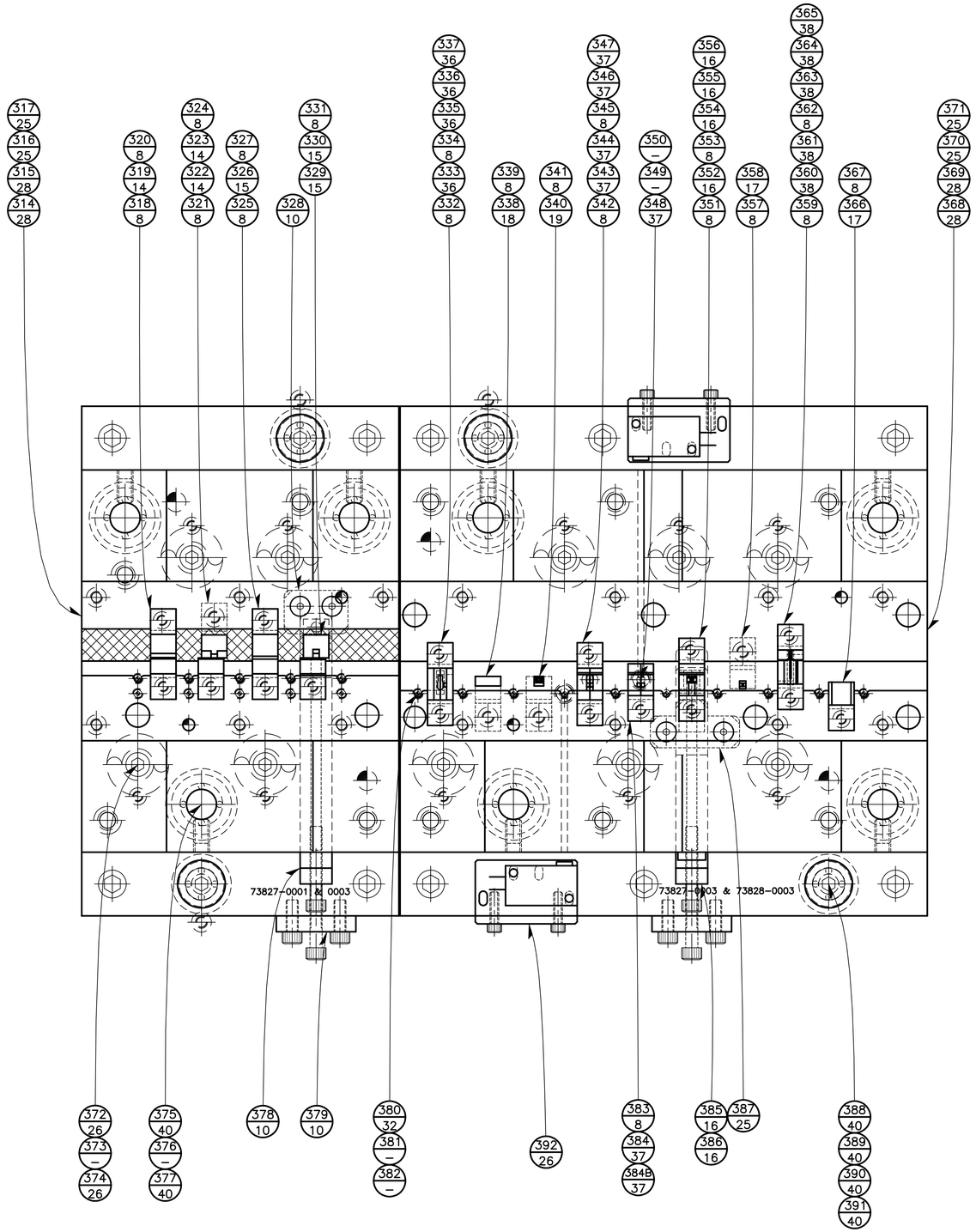

Advanced Designs, Inc.	
Powers Lake, Wis.	
CUST.	**Your Customer**
CAD FILE: CONTACT-4	DATE
DRAWN BY: M. Dennis	05-17-08
CHECKED: M. Dennis	05-17-08
APPROVED: –	02-01-06
SHT. NO. 4 of 43	
SCALE 1 = 1	
PART NO. 87654321	TOOL NO. 05-500
PART NAME Contact, Changeover	

www.diedesigner.com

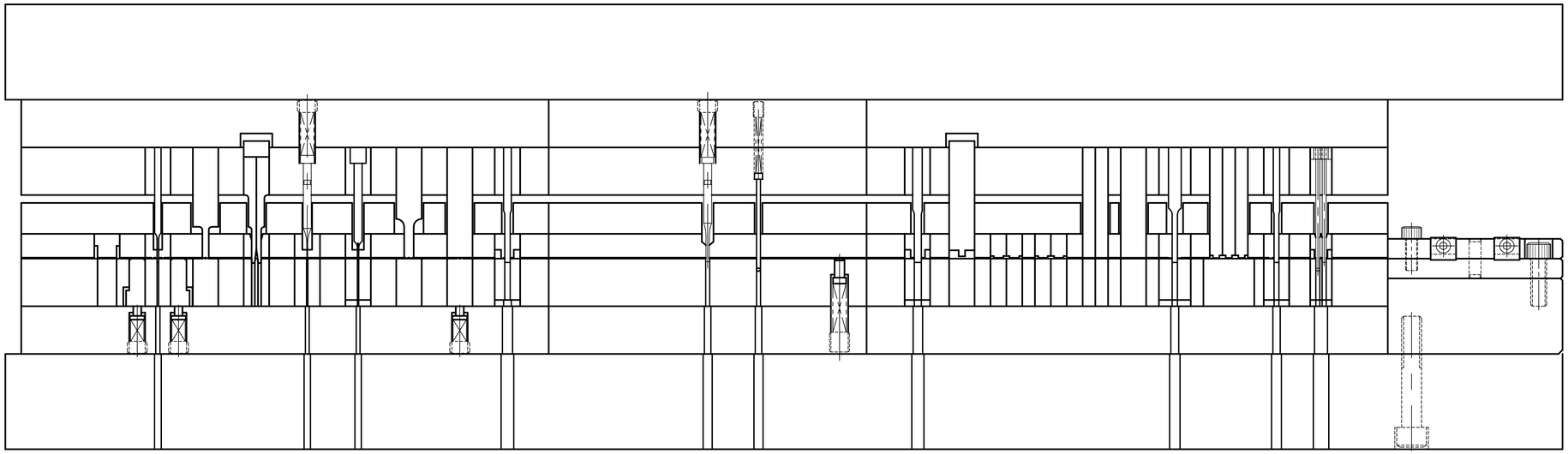

Section A–A

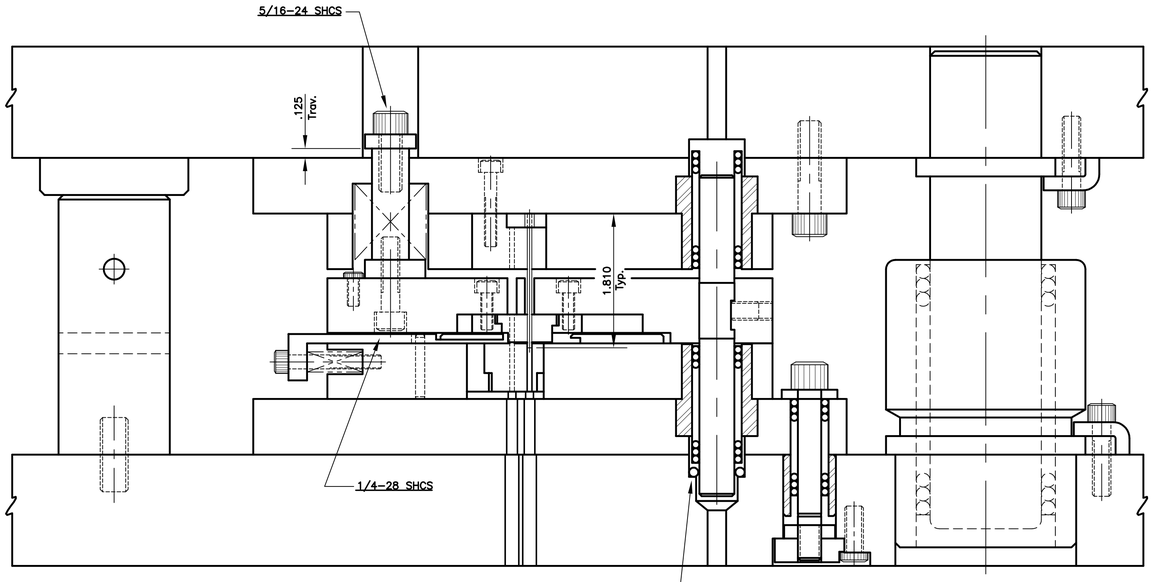

Section B–B

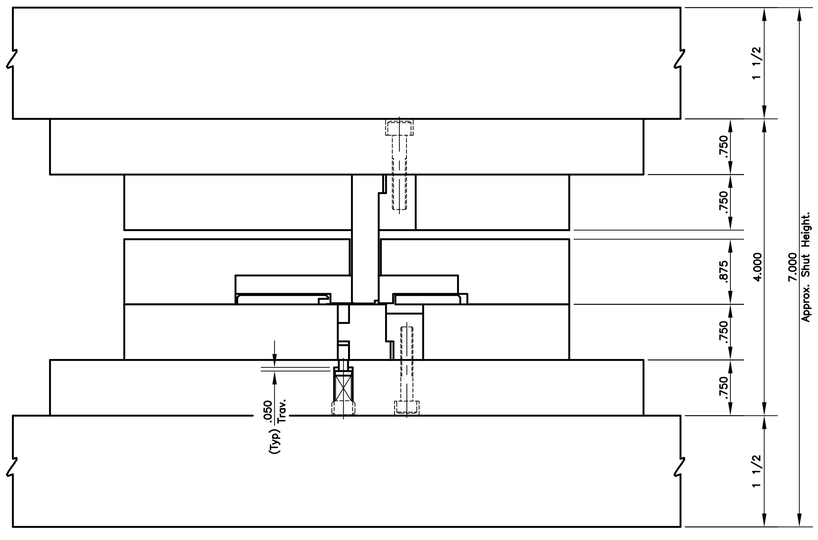

Section C–C

Advanced Designs, Inc. **Powers Lake, Wis.**	
CUST. **Your Customer**	
CAD FILE: CONTACT–5	DATE
DRAWN BY: M. Dennis	05–17–08
CHECKED: M. Dennis	05–17–08
APPROVED: –	02–01–06
SHT. NO. 5 of 43	
SCALE 1 = 1	
PART NO. 87654321	TOOL NO. 05–500
PART NAME Contact, Changeover	

www.diedesigner.com

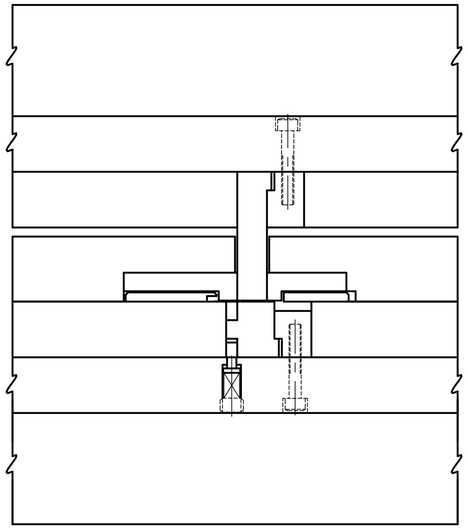

Section D–D

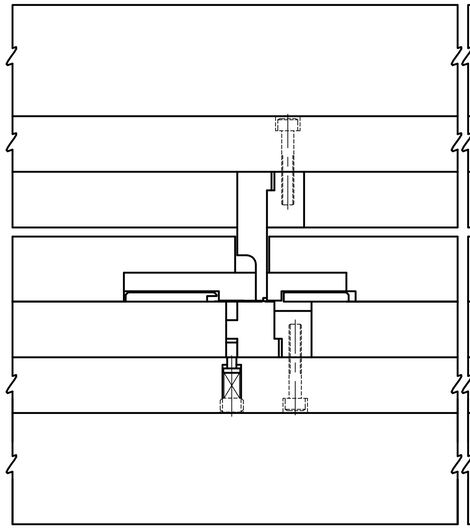

Section E–E

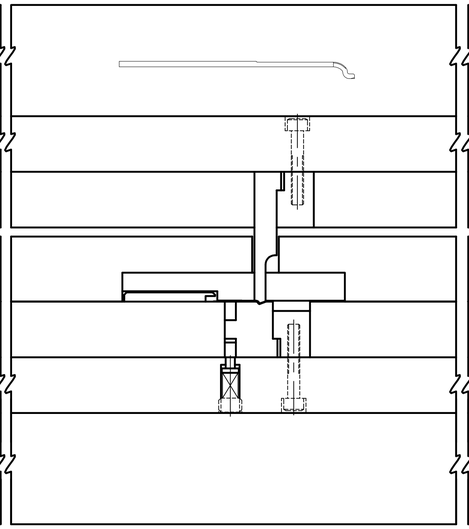

Section F–F

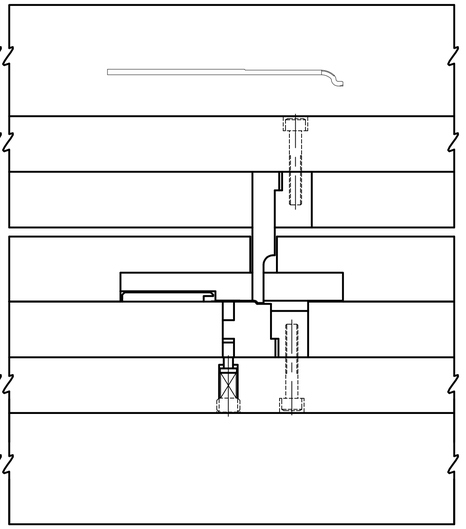

Section G–G

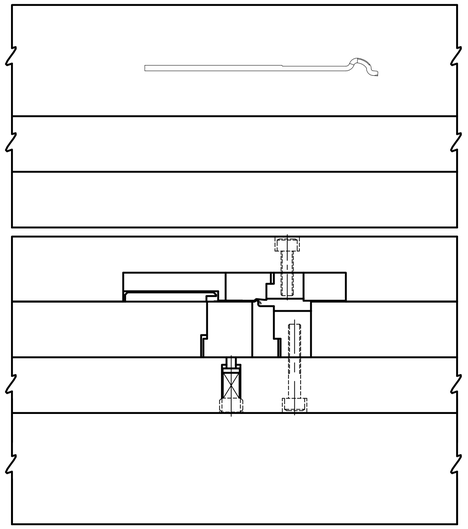

Section H–H

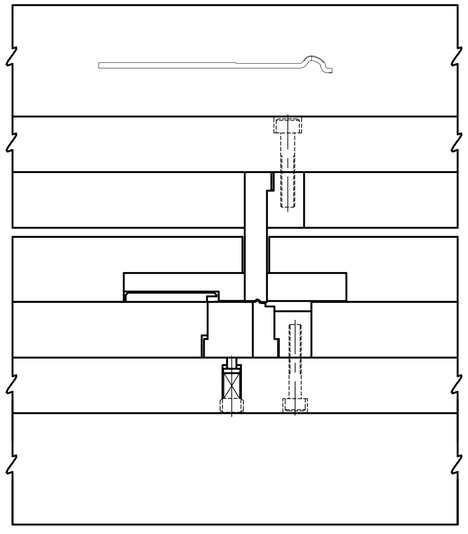

Section I–I

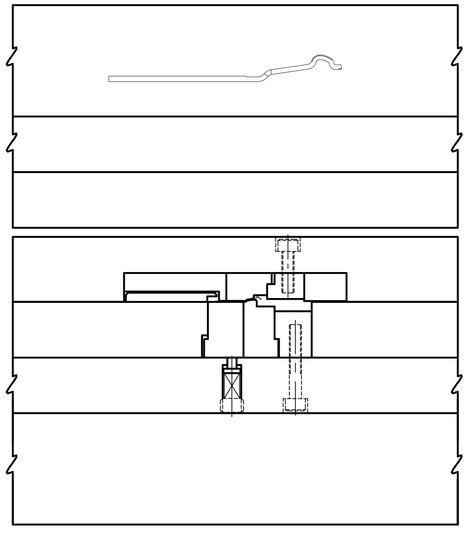

Section J–J

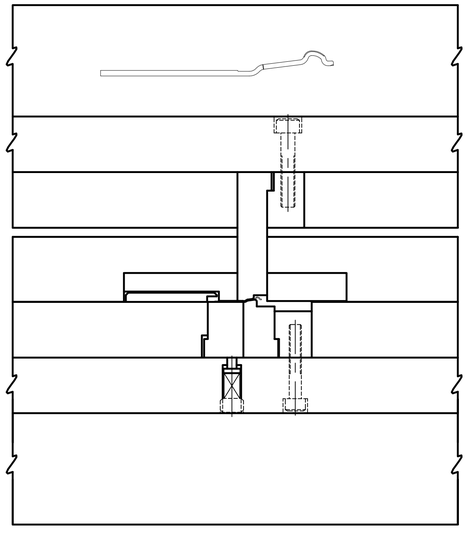

Section K–K

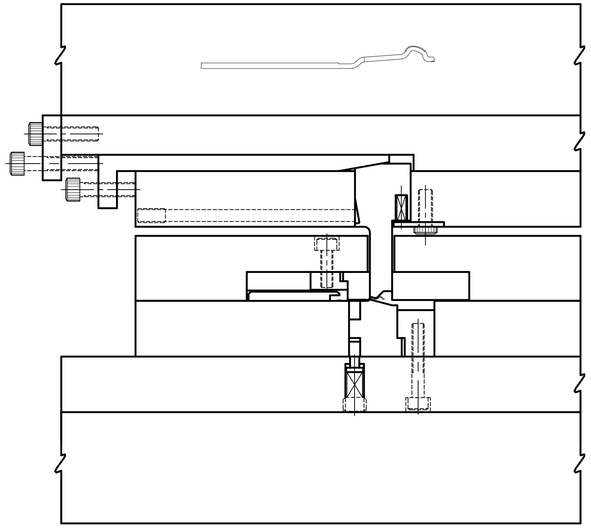

Section L–L

Advanced Designs, Inc.
Powers Lake, Wis.

CUST. **Your Customer**

CAD FILE:	CONTACT–6	DATE	SHT. NO. 6 of 43
DRAWN BY:	M. Dennis	05–17–08	
CHECKED:	M. Dennis	05–17–08	SCALE 1 = 1
APPROVED:	–	02–01–06	
PART NO.	87654321		TOOL NO. 05–500
PART NAME	Contact, Changeover		

www.diedesigner.com

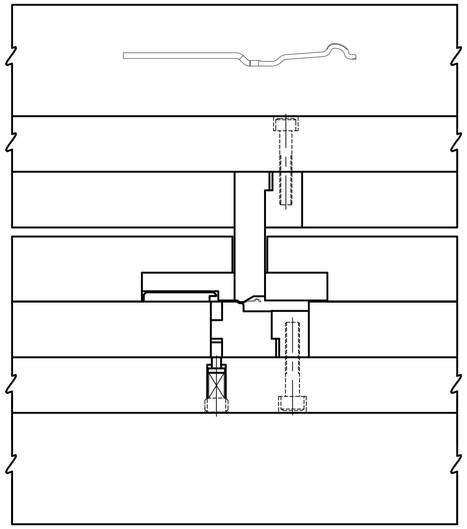

Section M–M

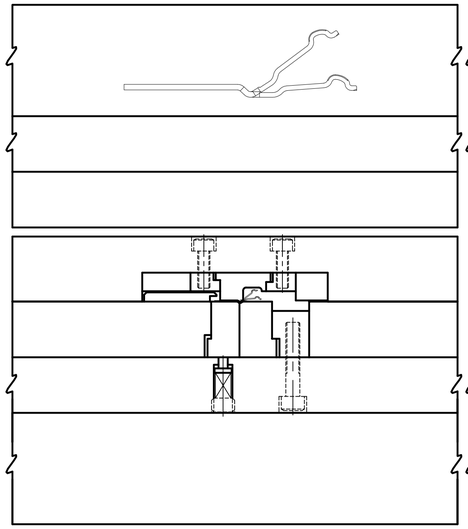

Section N–N

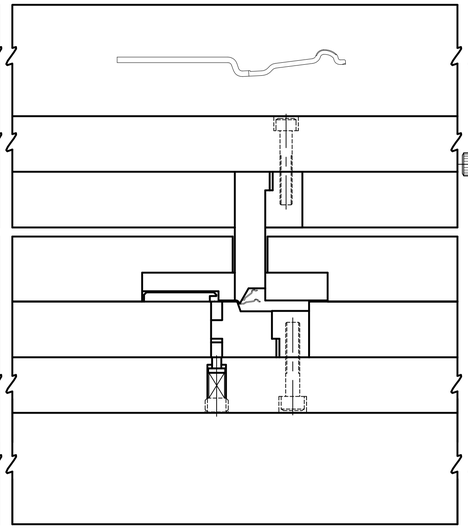

Section O–O

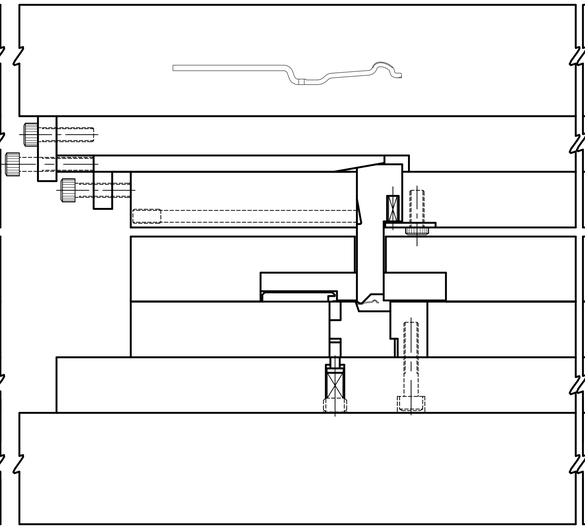

Section P–P

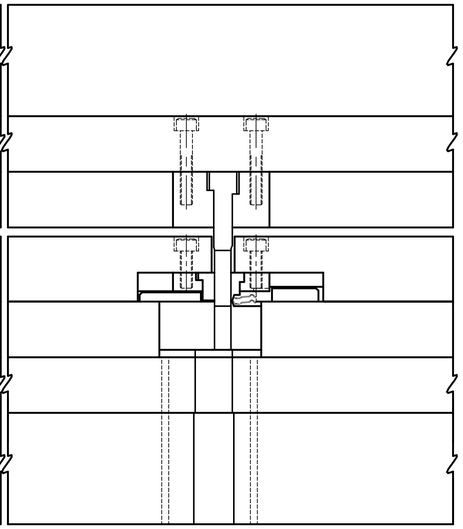

Section Q–Q

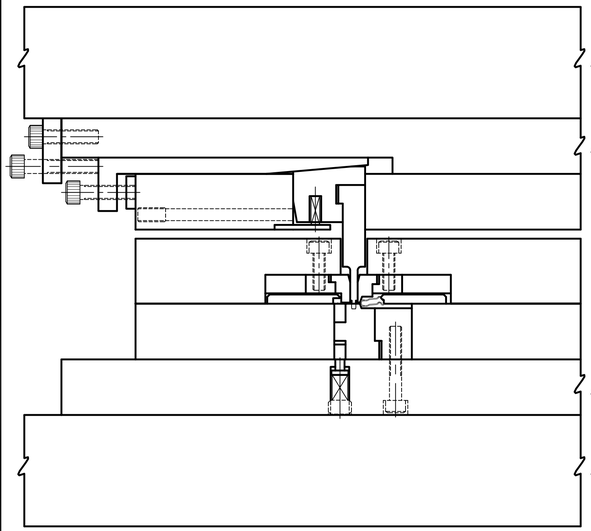

Section R–R

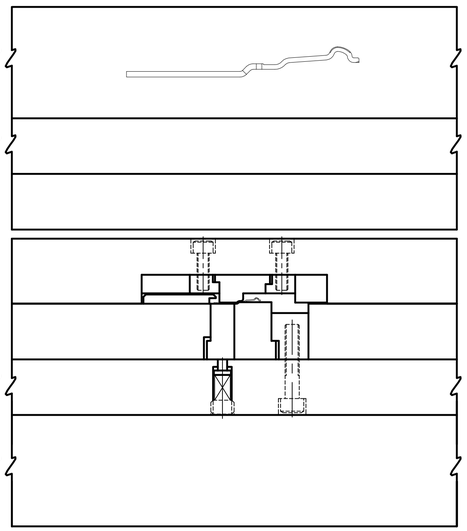

Section S–S

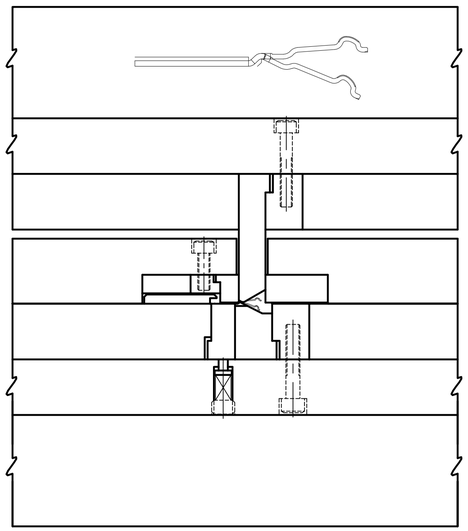

Section T–T

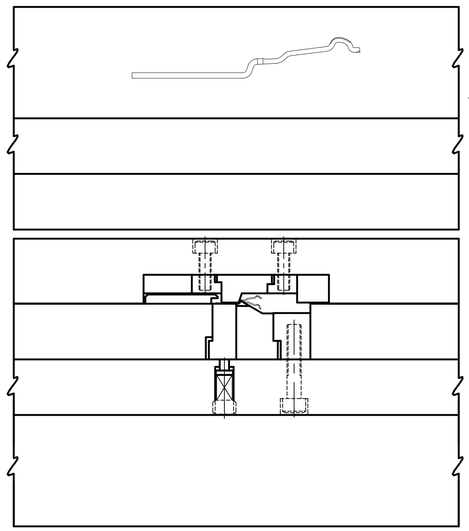

Section U–U

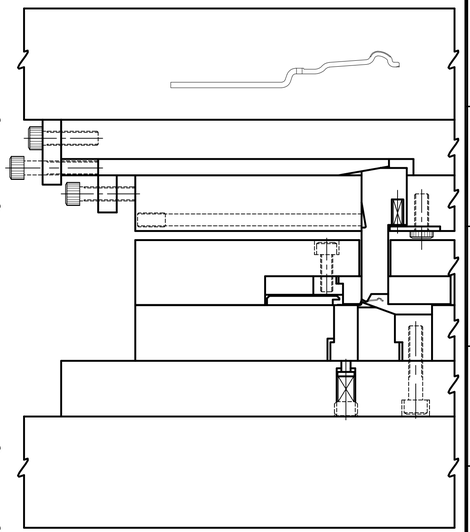

Section V–V

Advanced Designs, Inc. **Powers Lake, Wis.**			
CUST.	**Your Customer**		
CAD FILE:	CONTACT–7	DATE	SHT. NO. 7 of 43
DRAWN BY:	M. Dennis	05–17–08	
CHECKED:	M. Dennis	05–17–08	SCALE 1 = 1
APPROVED:	–	02–01–06	
PART NO.	87654321		TOOL NO. 05–500
PART NAME	Contact, Changeover		

www.diedesigner.com

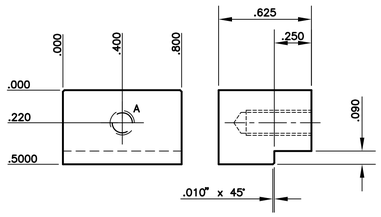

79 Bottom Clamp 1 req.d
A-2 Rc 58-60

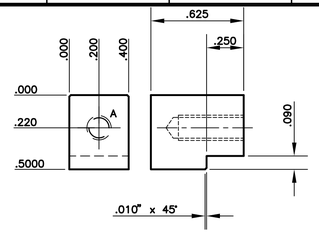

272 276 280 283 286 289
45 56 67 71 257 260
15 26 30 36 39 42
12

Bottom Clamp 1 req.d each
A-2 Rc 58-60

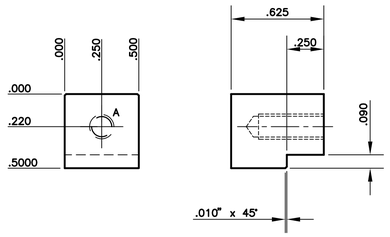

59 63 Bottom Clamp 1 req.d each
A-2 Rc 58-60

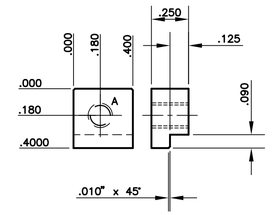

318 325 332 342 351 359
129 175 182 192 201 209

Stripper Clamp 1 req.d each
A-2 Rc 58-60

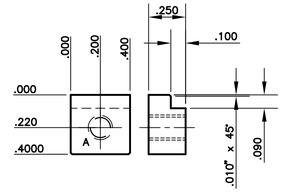

345 383 353 362 367
320 324 327 331 334
195 237 203 212 217
177 184

Stripper Clamp 1 req.d each
A-2 Rc 58-60

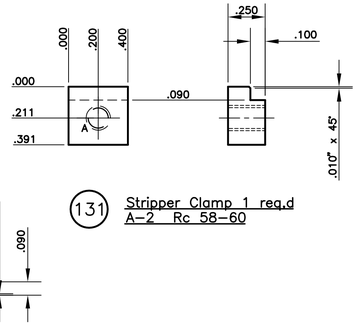

131 Stripper Clamp 1 req.d
A-2 Rc 58-60

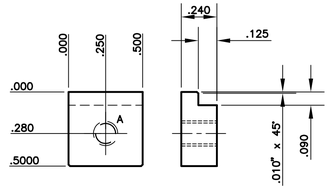

151 155 Stripper Clamp 1 req.d each
A-2 Rc 58-60

161 Stripper Clamp 1 req.d
A-2 Rc 58-60

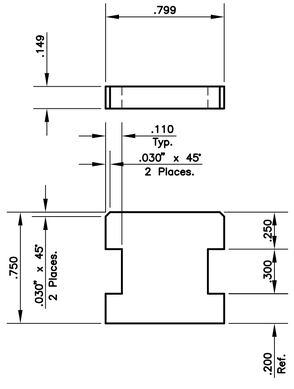

81 Lifter Pad 1 req.d
A-2 Rc 58-60

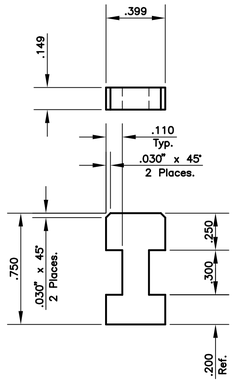

58 70 74 259 264
14 19 38 41 47

Lifter Pad 1 req.d each
A-2 Rc 58-60

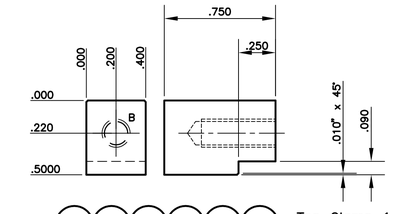

191 207 321 339 341 357
145 148 153 157 173 178 189

Top Clamp 1 req.d each
A-2 Rc 58-60

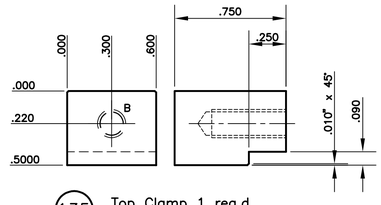

135 Top Clamp 1 req.d
A-2 Rc 58-60

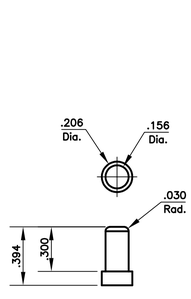

308 Lifter Pin 3 req.d
M-2 Rc 60-62

111 Lifter Pin 6 req.d
M-2 Rc 60-62

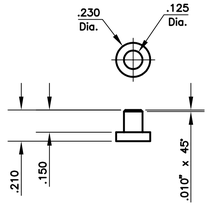

300 Transfer Pin 13 req.d
M-2 Rc 60-62

106 Transfer Pin 19 req.d
M-2 Rc 60-62

Hole Data
A = Drill & Tap Far Side For #8-32 Thread.
B = Drill & Tap Far Side For #10-32 Thread.

Advanced Designs, Inc.
Powers Lake, Wis.

CUST. **Your Customer**

CAD FILE:	CONTACT-8	DATE	SHT. NO. 8 of 43
DRAWN BY:	M. Dennis	05-17-08	
CHECKED:	M. Dennis	05-17-08	SCALE 1 = 1
APPROVED:	-	02-01-06	
PART NO.	87654321		TOOL NO. 05-500
PART NAME	Contact, Changeover		

www.diedesigner.com

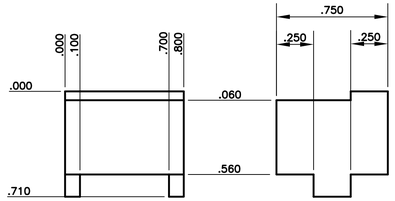

80 Coin Anvil 1 req.d
Carbide, CD650 Rc –

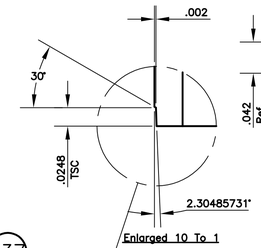

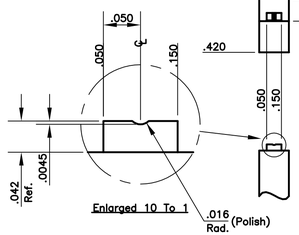

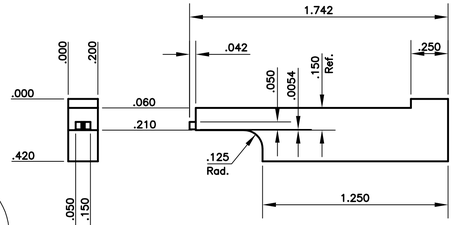

138 Coin Punch 1 req.d
Carbide, CD650 Rc –

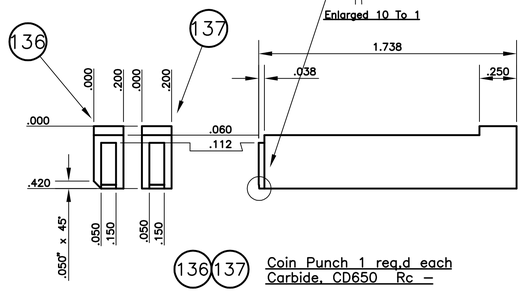

136 137 Coin Punch 1 req.d each
Carbide, CD650 Rc –

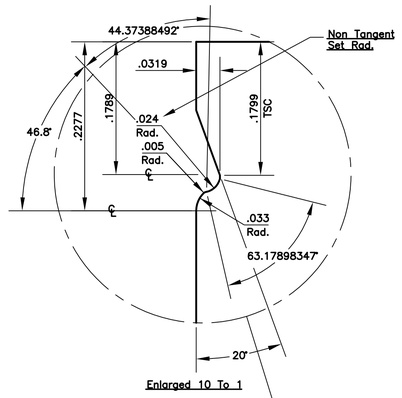

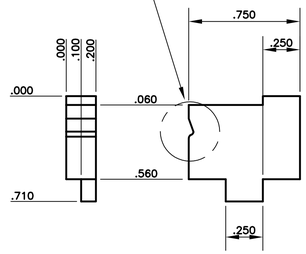

68 Form Insert 1 req.d
Carbide, CD650 Rc –

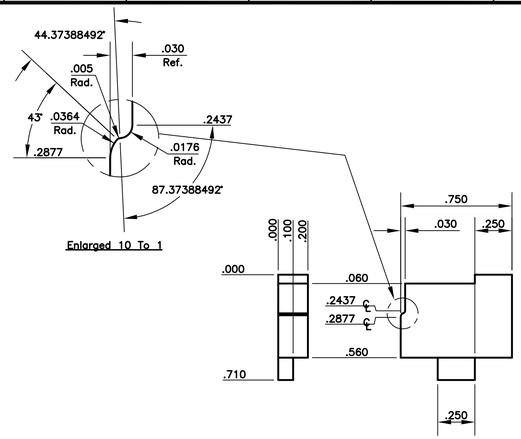

69 Form Insert 1 req.d
Carbide, CD650 Rc –

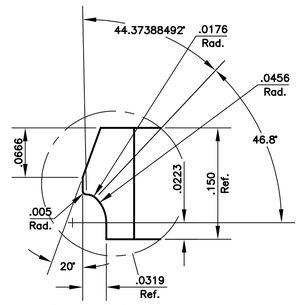

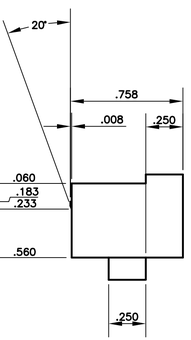

73 Coin Insert 1 req.d
Carbide, CD650 Rc –

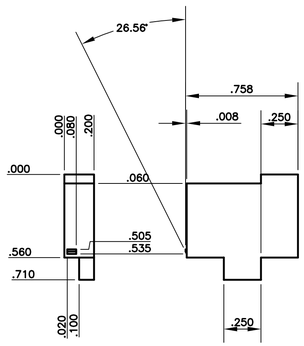

72 Coin Insert 1 req.d
Carbide, CD650 Rc –

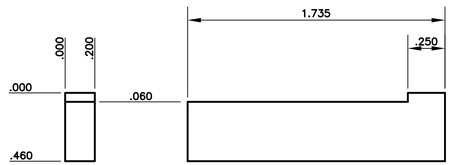

146 Coin Anvil 1 req.d
Carbide, CD650 Rc –

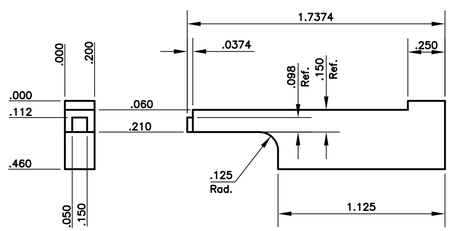

147 Coin Anvil 1 req.d
Carbide, CD650 Rc –

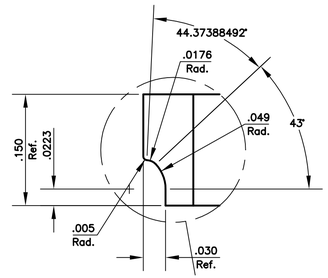

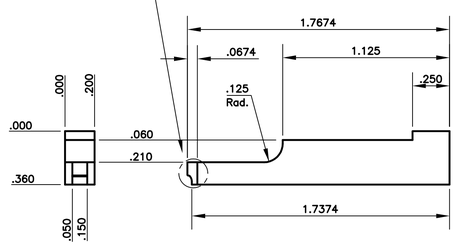

150 Form Punch 1 req.d
Carbide, CD650 Rc –

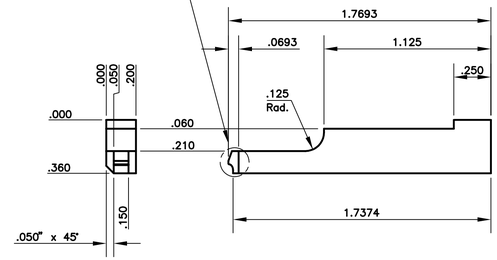

149 Form Punch 1 req.d
Carbide, CD650 Rc –

	Advanced Designs, Inc. Powers Lake, Wis.
CUST.	Your Customer
CAD FILE: CONTACT–9	DATE
DRAWN BY: M. Dennis	05–17–08
CHECKED: M. Dennis	05–17–08
APPROVED: –	02–01–06
SHT. NO.	9 of 43
SCALE	1 = 1
PART NO.	87654321
TOOL NO.	05–500
PART NAME	Contact, Changeover

www.diedesigner.com

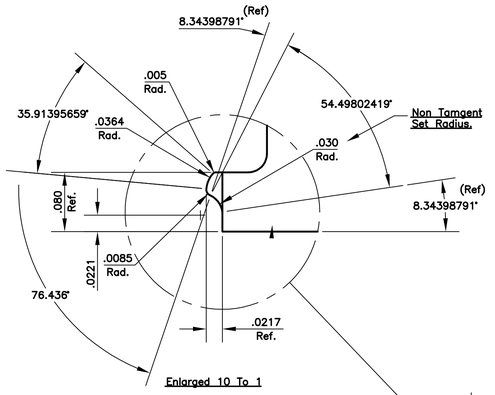

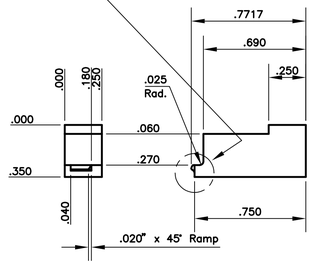

64 Form Insert 1 req.d
Carbide, CD650 Rc –

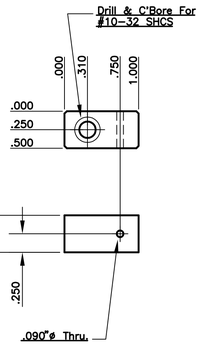

1=1 119 Buckle Sensor Mounr 1 req.d
Nylon Rc –

Hole Data
A = .0630"ø Pilot Hole, Tap Far Side For #6-32 Set Screw.
B = Drill & Tap Far Side For #6-32 Thread.
C = Drill & Tap For #10-32 Thread.
D = 7/32"ø Drill Thru.

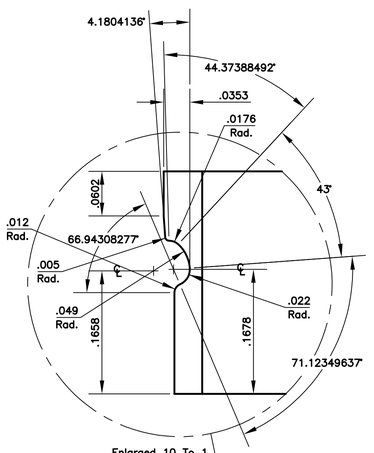

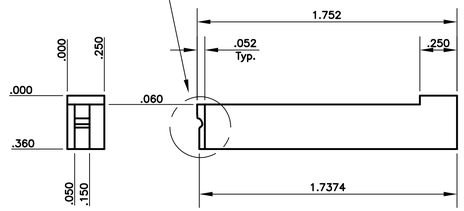

154 Form Punch 1 req.d
Carbide, CD650 Rc –

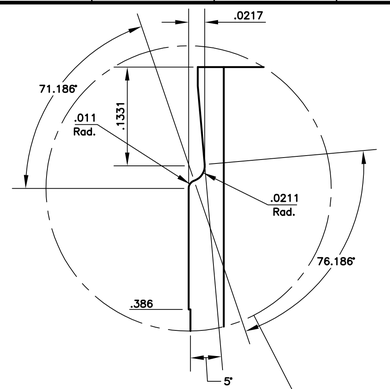

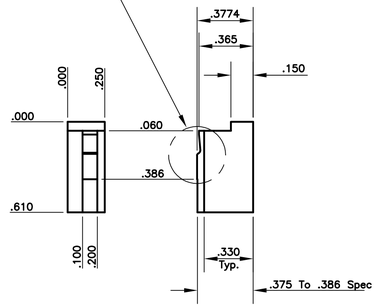

152 Stripper Insert 1 req.d
Carbide, CD650 Rc –

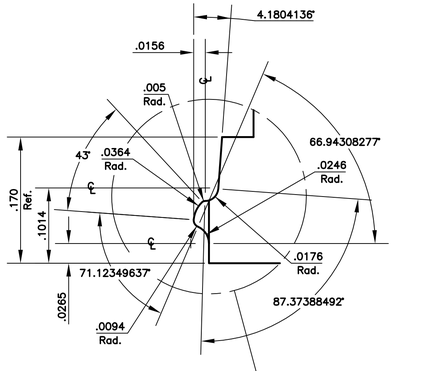

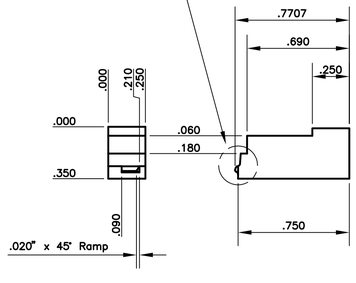

65 Form Insert 1 req.d
Carbide, CD650 Rc –

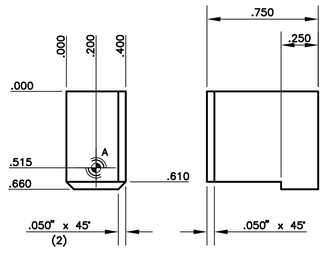

66 Pressure Pad 1 req.d
A–2 Rc 58–60

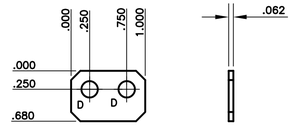

1=1 162 180 328 Spring Retainer 1 req.d each
A–2 Rc 58–60

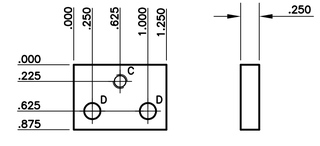

1=1 379 Slide Adjuster Mount 2 req.d
A–2 Rc 58–60

1=1 230 Slide Adjuster Mount 3 req.d
A–2 Rc 58–60

378 Slide Adjuster 1 req.d
A–2 Rc 58–60

229 Slide Adjuster 2 req.d
A–2 Rc 58–60

Advanced Designs, Inc.
Powers Lake, Wis.

CUST. **Your Customer**

CAD FILE:	CONTACT–10	DATE	SHT. NO. 10 of 43
DRAWN BY:	M. Dennis	05–17–08	
CHECKED:	M. Dennis	05–17–08	SCALE 1 = 1
APPROVED:	–	02–01–06	
PART NO.	87654321		TOOL NO. 05–500
PART NAME	Contact, Changeover		

www.diedesigner.com

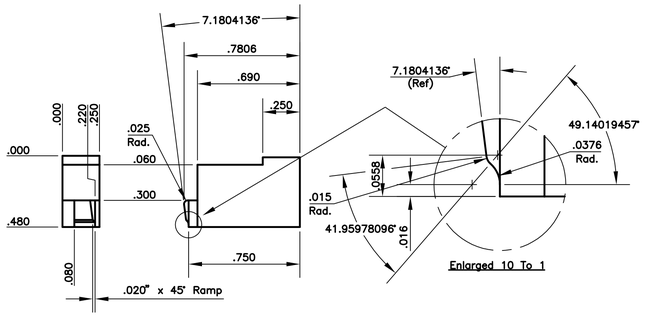

61 Form Insert 1 req.d
Carbide, CD650 Rc –

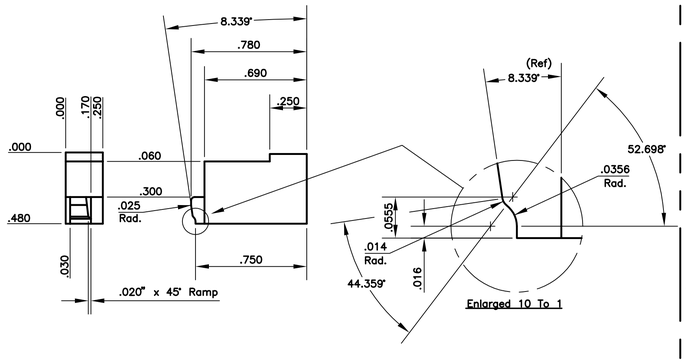

60 Form Insert 1 req.d
Carbide, CD650 Rc –

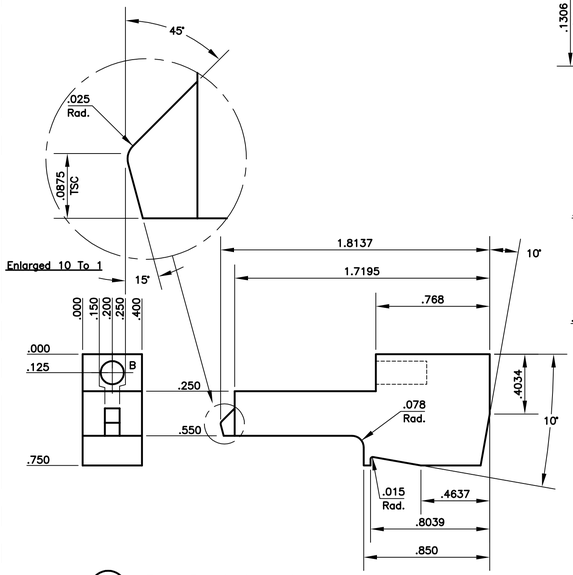

159 Form Punch 1 req.d
Carbide, CD650 Rc –

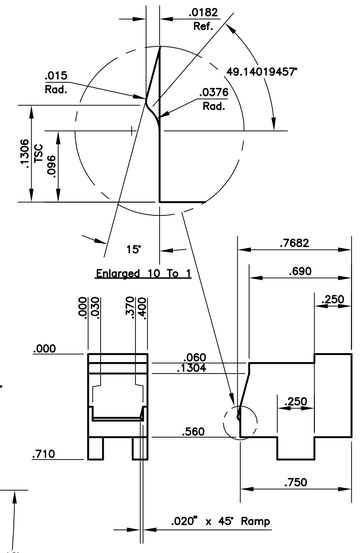

57 Form Insert 1 req.d
Carbide, CD650 Rc –

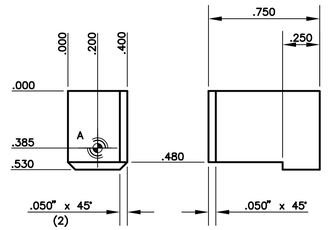

62 Pressure Pad 1 req.d
A-2 Rc 58-60

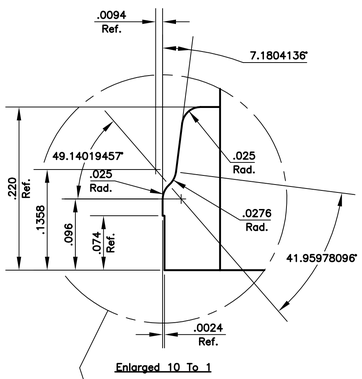

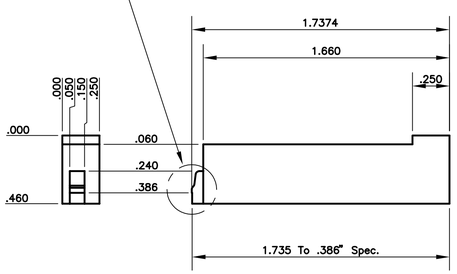

158 Form Punch 1 req.d
Carbide, CD650 Rc –

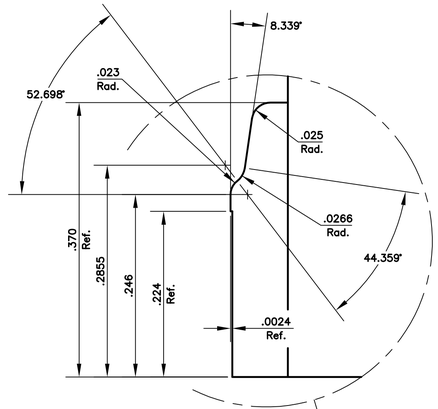

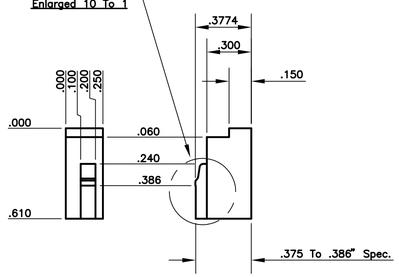

156 Stripper Insert 1 req.d
Carbide, CD650 Rc –

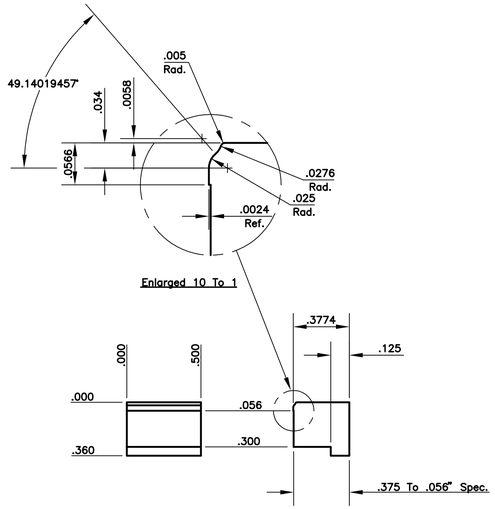

160 Stripper Insert 1 req.d
Carbide, CD650 Rc –

Hole Data
A = .0630"ø Pilot Hole Thru. Tap Far Side For #6-32 Set Screw.
B = 5/32"ø Drill x 11/32" Deep.

Advanced Designs, Inc.	
Powers Lake, Wis.	
CUST.	**Your Customer**
CAD FILE: CONTACT-11	DATE
DRAWN BY: M. Dennis	05-17-08
CHECKED: M. Dennis	05-17-08
APPROVED: –	02-01-06
PART NO.	87654321
PART NAME	Contact, Changeover
SHT. NO.	11 of 43
SCALE	2 = 1
TOOL NO.	05-500

www.diedesigner.com

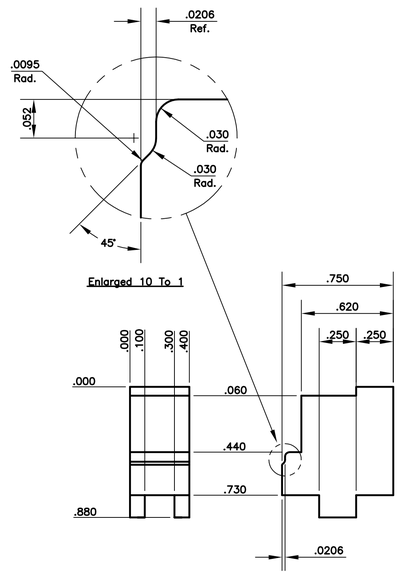

46 Form Insert 1 req.d
Carbide, CD650 Rc –

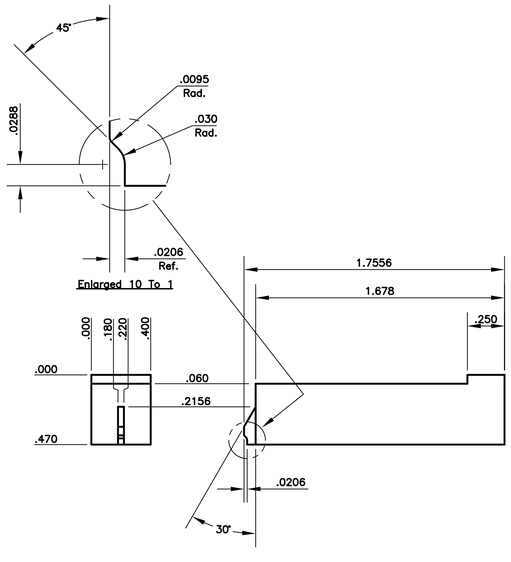

174 Form Punch 1 req.d
Carbide, CD650 Rc –

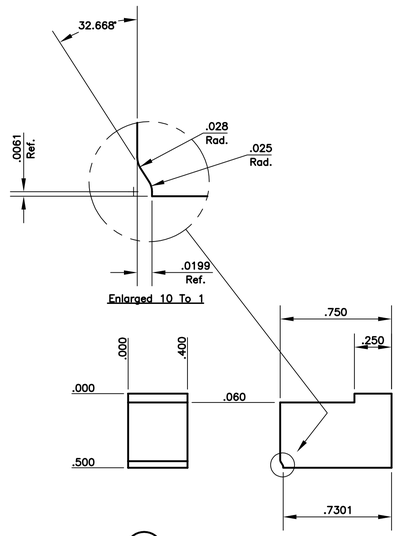

43 Form Insert 1 req.d
Carbide, CD650 Rc –

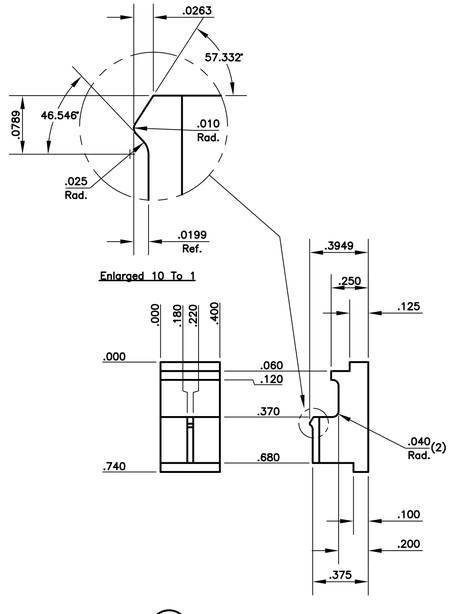

176 Stripper Insert 1 req.d
Carbide, CD650 Rc –

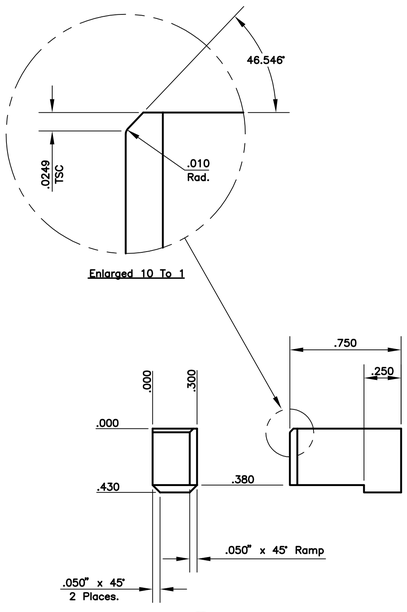

44 Pressure Pad 1 req.d
A–2 Rc 58–60

Advanced Designs, Inc. **Powers Lake, Wis.**			
CUST.	**Your Customer**		
CAD FILE:	CONTACT–12	DATE	SHT. NO. 12 of 43
DRAWN BY:	M. Dennis	05–17–08	
CHECKED:	M. Dennis	05–17–08	SCALE 2 = 1
APPROVED:	–	02–01–06	
PART NO.	87654321		TOOL NO. 05–500
PART NAME	Contact, Changeover		

www.diedesigner.com

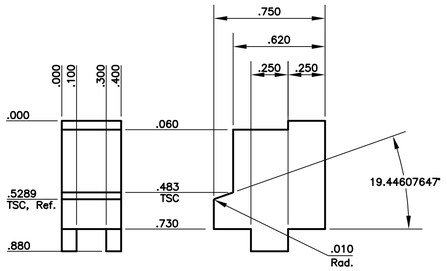

40 Form Insert 1 req.d
Carbide, CD650 Rc –

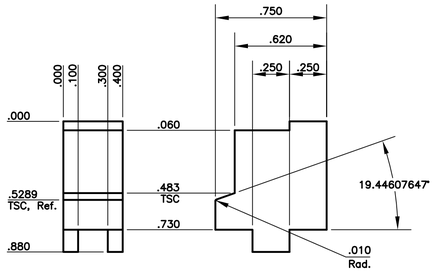

37 Form Insert 1 req.d
Carbide, CD650 Rc –

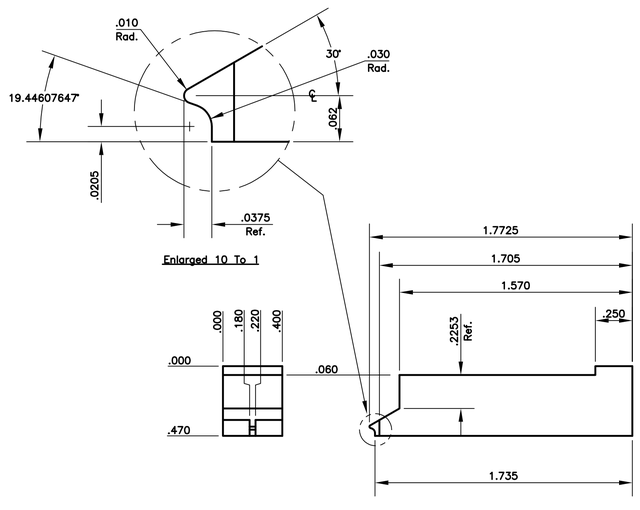

179 Form Punch 1 req.d
Carbide, CD650 Rc –

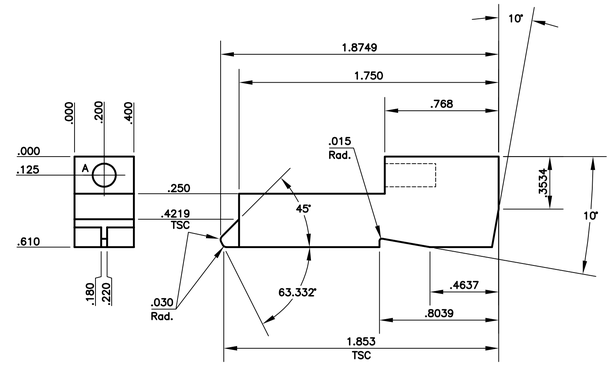

181 Form Punch 1 req.d
Carbide, CD650 Rc –

Hole Data
A = 5/32"ø Drill x 11/32" Deep.

	Advanced Designs, Inc. Powers Lake, Wis.
CUST.	Your Customer
CAD FILE: CONTACT–13	DATE
DRAWN BY: M. Dennis	05–17–08
CHECKED: M. Dennis	05–17–08
APPROVED: –	02–01–06
SHT. NO.	13 of 43
SCALE	2 = 1
PART NO.	87654321
TOOL NO.	05–500
PART NAME	Contact, Changeover

www.diedesigner.com

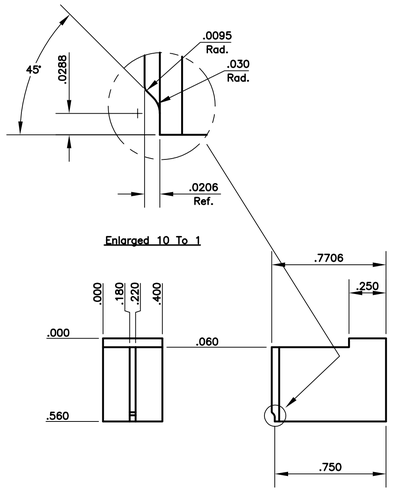

290 Form Insert 1 req.d
Carbide, CD650 Rc –

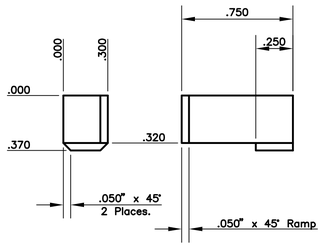

282 285 288 291 Pressure Pad 1 req.d each
A–2 Rc 58–60

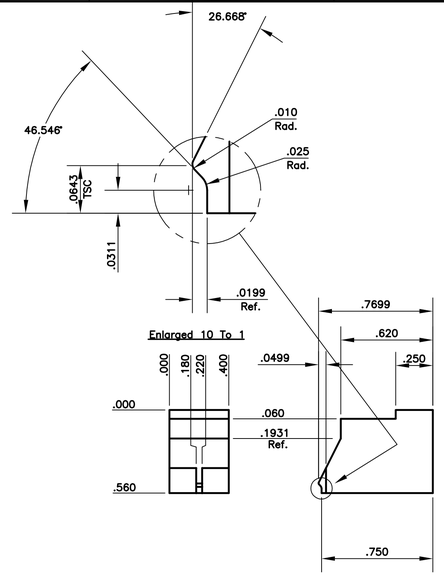

287 Form Insert 1 req.d
Carbide, CD650 Rc –

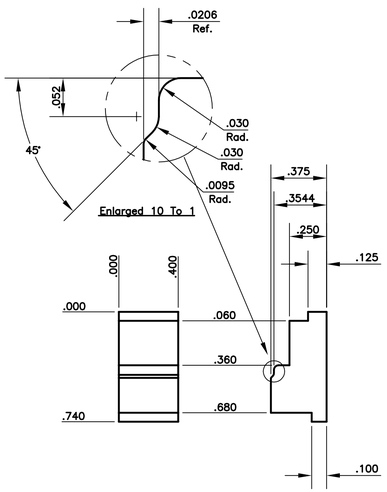

319 Stripper Insert 1 req.d
Carbide, CD650 Rc –

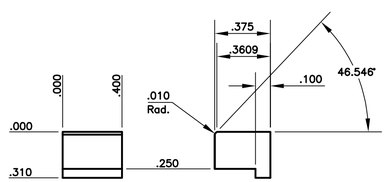

323 Stripper Insert 1 req.d
Carbide, CD650 Rc –

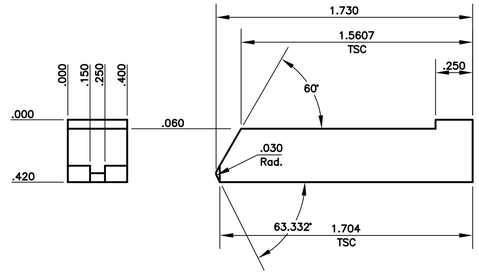

322 Form Punch 1 req.d
Carbide, CD650 Rc –

Advanced Designs, Inc. Powers Lake, Wis.			
CUST.	Your Customer		
CAD FILE:	CONTACT–14	DATE	SHT. NO. 14 of 43
DRAWN BY:	M. Dennis	05–17–08	
CHECKED:	M. Dennis	05–17–08	SCALE 2 = 1
APPROVED:	–	02–01–06	
PART NO.	87654321		TOOL NO. 05–500
PART NAME	Contact, Changeover		

www.diedesigner.com

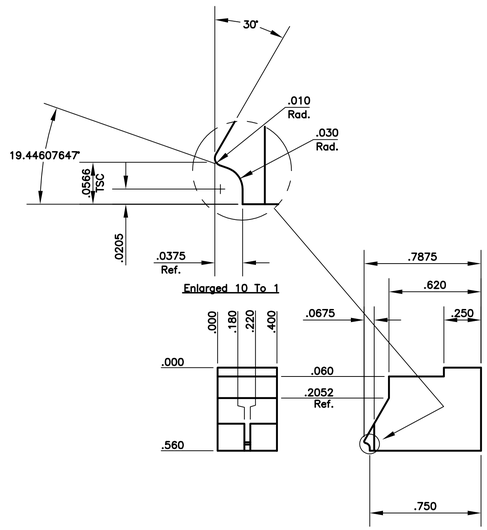

284 Form Insert 1 req.d
Carbide, CD650 Rc –

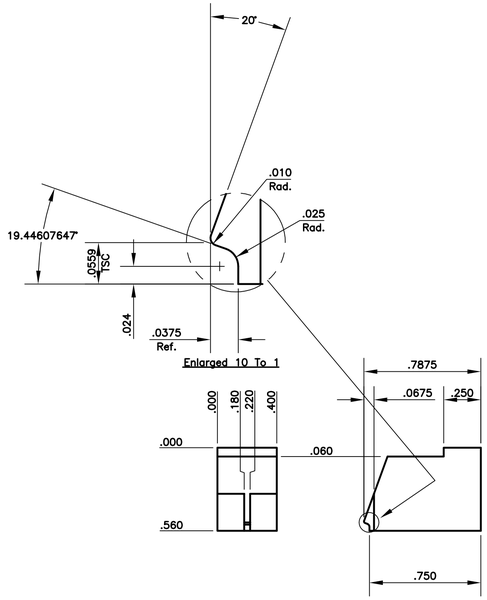

281 Form Insert 1 req.d
Carbide, CD650 Rc –

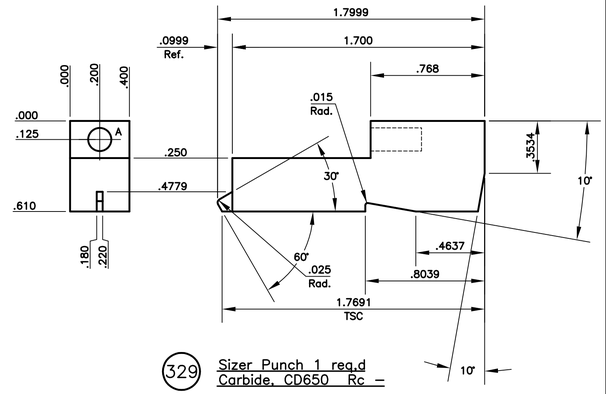

329 Sizer Punch 1 req.d
Carbide, CD650 Rc –

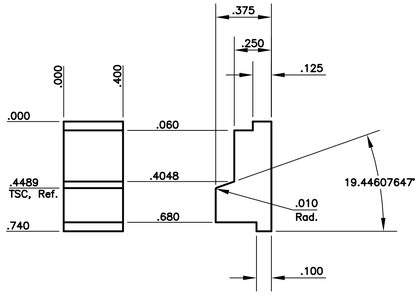

326 Stripper Insert 1 req.d
Carbide, CD650 Rc –

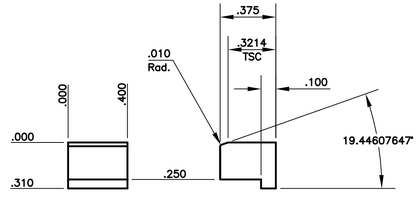

330 Stripper Insert 1 req.d
Carbide, CD650 Rc –

Hole Data
A = 5/32"ø Drill x 11/32" Deep.

Advanced Designs, Inc. **Powers Lake, Wis.**			
CUST.	**Your Customer**		
CAD FILE:	CONTACT–15	DATE	SHT. NO. 15 of 43
DRAWN BY:	M. Dennis	05–17–08	
CHECKED:	M. Dennis	05–17–08	SCALE 2 = 1
APPROVED:	–	02–01–06	
PART NO.	87654321		TOOL NO. 05–500
PART NAME	Contact, Changeover		

www.diedesigner.com

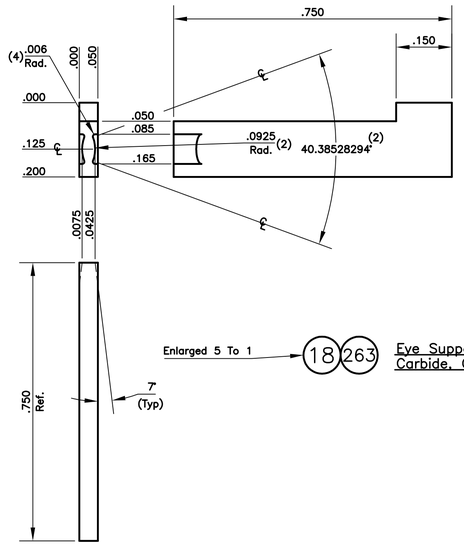

Enlarged 5 To 1 — 18 263 — Eye Support 1 req.d each
Carbide, CD650 Rc –

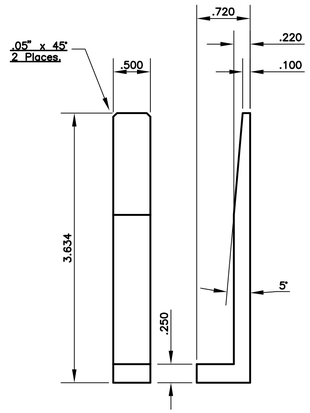

239 — Slide 1 req.d
A–2 Rc 58–60

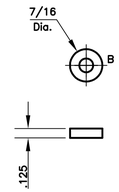

240 386 — Slide Limit, Stop 1 req.d each
A–2 Rc 58–60

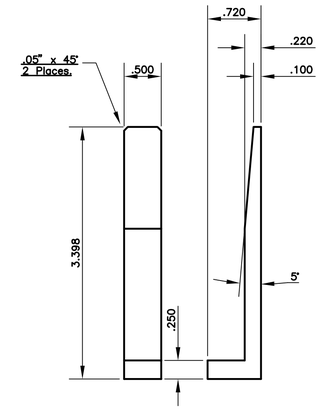

385 — Slide 1 req.d
A–2 Rc 58–60

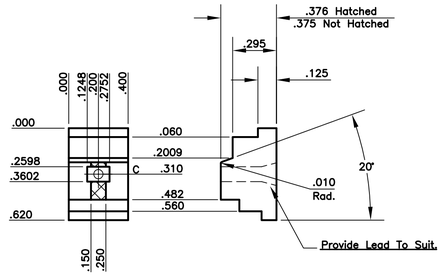

202 352 — Stripper Insert 1 req.d each
Carbide, CD650 Rc –

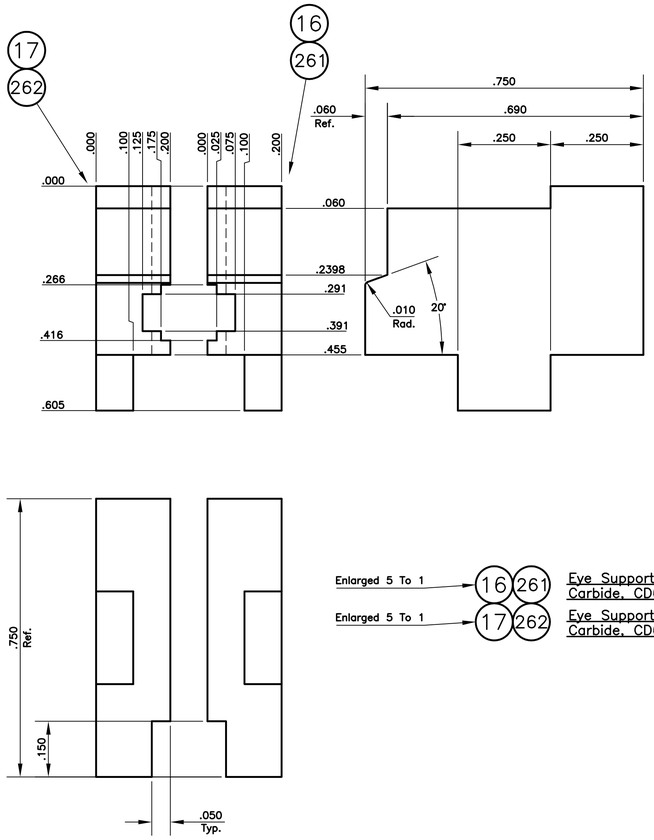

Enlarged 5 To 1 — 16 261 — Eye Support Retainer 1 req.d each
Carbide, CD650 Rc –

Enlarged 5 To 1 — 17 262 — Eye Support Retainer 1 req.d each
Carbide, CD650 Rc –

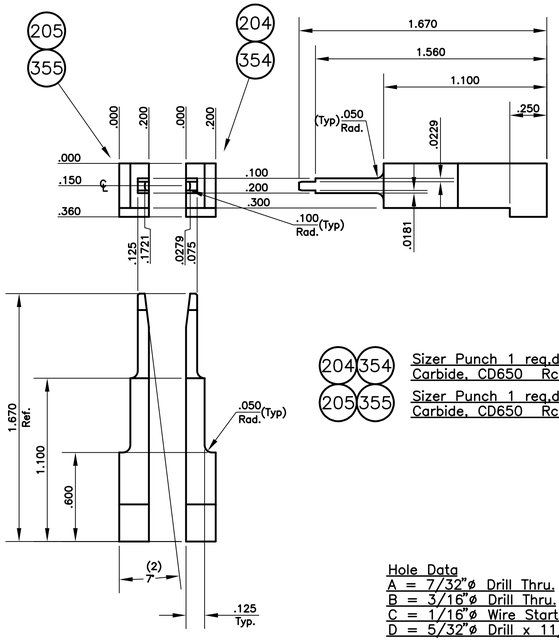

204 354 — Sizer Punch 1 req.d each
Carbide, CD650 Rc –

205 355 — Sizer Punch 1 req.d each
Carbide, CD650 Rc –

Hole Data
A = 7/32"ø Drill Thru.
B = 3/16"ø Drill Thru.
C = 1/16"ø Wire Start Hole.
D = 5/32"ø Drill x 11/32" Deep.

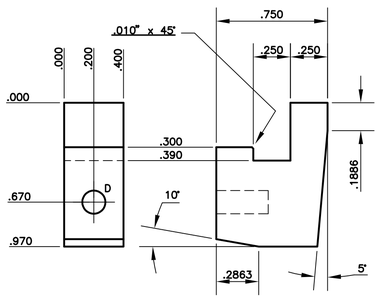

206 356 — Punch Retainer 1 req.d each
A–2 Rc 58–60

Advanced Designs, Inc.
Powers Lake, Wis.

CUST. **Your Customer**

CAD FILE:	CONTACT–16	DATE	SHT. NO. 16 of 43
DRAWN BY:	M. Dennis	05–17–08	
CHECKED:	M. Dennis	05–17–08	SCALE 2 = 1
APPROVED:	–	02–01–06	
PART NO.	87654321		TOOL NO. 05–500
PART NAME	Contact, Changeover		

www.diedesigner.com

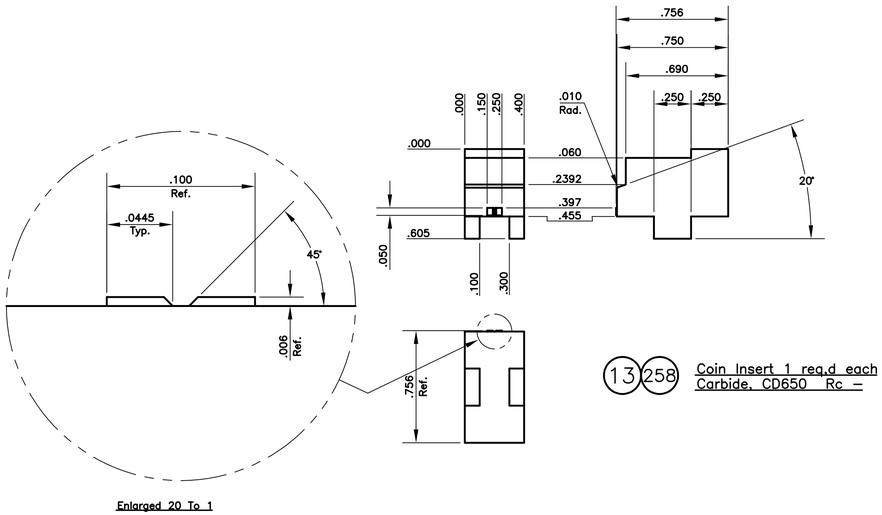

Enlarged 20 To 1

13 258 Coin Insert 1 req.d each
Carbide, CD650 Rc –

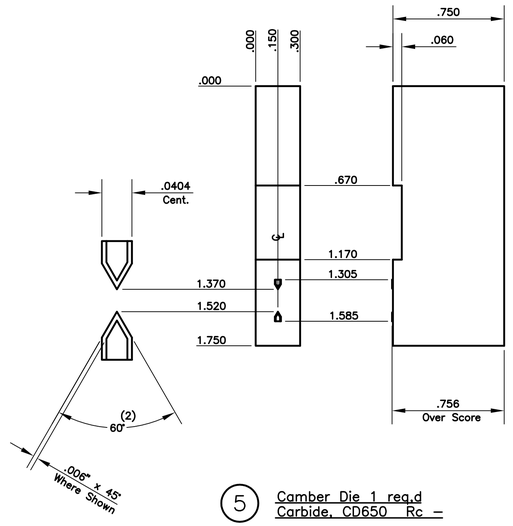

5 Camber Die 1 req.d
Carbide, CD650 Rc –

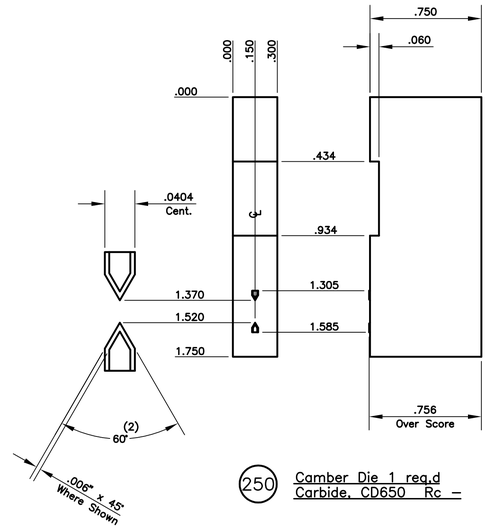

250 Camber Die 1 req.d
Carbide, CD650 Rc –

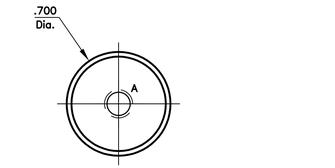

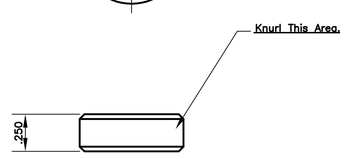

100 295 Lock Knob 1 req.d each
A–2 Rc 58–60

Hole Data
A = Drill & Tap For #10–32 Thread.

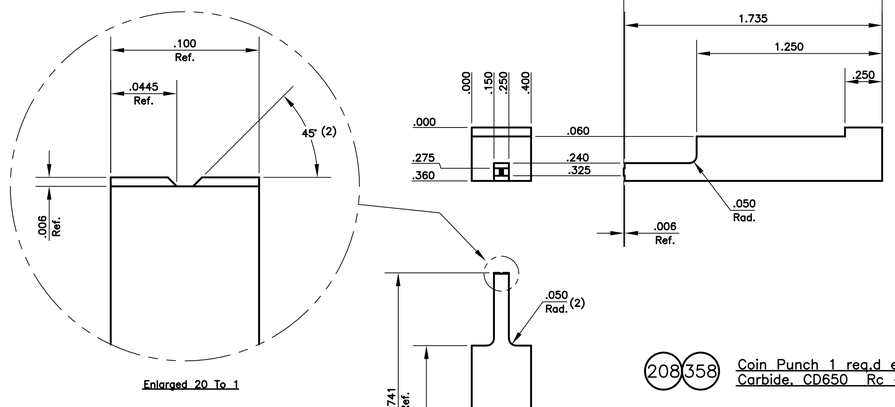

Enlarged 20 To 1

208 358 Coin Punch 1 req.d each
Carbide, CD650 Rc –

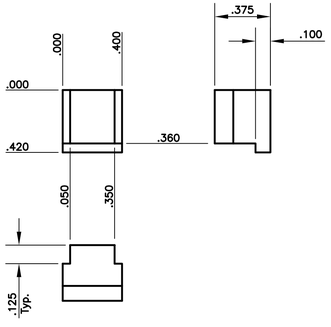

216 366 Coin Anvil 1 req.d each
Carbide, CD650 Rc –

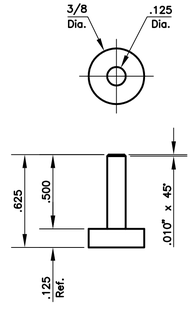

8 Transfer Pin 1 req.d
A–2 Rc 58–60

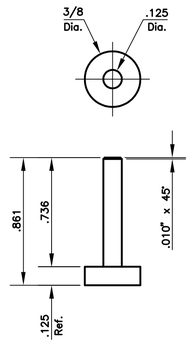

253 Transfer Pin 1 req.d
A–2 Rc 58–60

Advanced Designs, Inc.	
Powers Lake, Wis.	
CUST.	**Your Customer**
CAD FILE: CONTACT–17	DATE
DRAWN BY: M. Dennis	05–17–08
CHECKED: M. Dennis	05–17–08
APPROVED: –	02–01–06
PART NO.	87654321
PART NAME	Contact, Changeover
SHT. NO.	17 of 43
SCALE	2 = 1
TOOL NO.	05–500

www.diedesigner.com

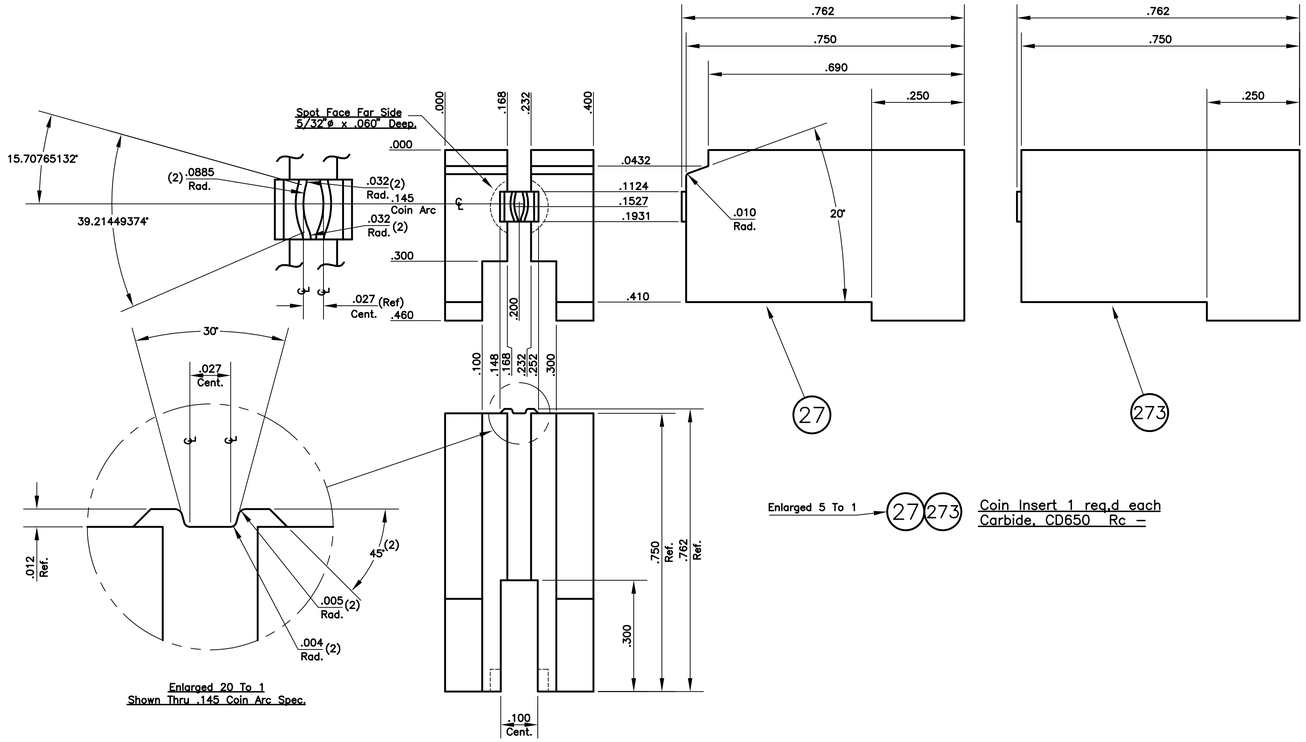

Enlarged 20 To 1
Shown Thru .145 Coin Arc Spec.

Enlarged 5 To 1 → 27 273 Coin Insert 1 req.d each
Carbide, CD650 Rc –

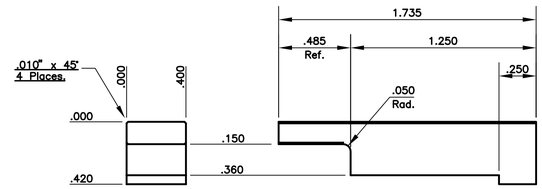

188 338 Coin Anvil 1 req.d each
Carbide, CD650 Rc –

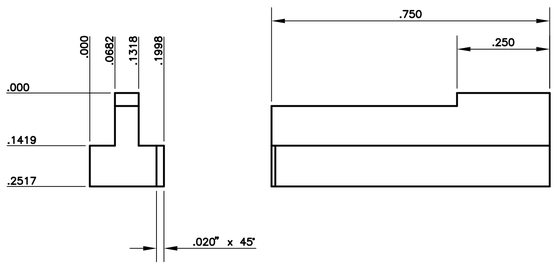

Enlarged 5 To 1 → 275 29 Lifter Insert 1 req.d each
M–2 Rc 60–62

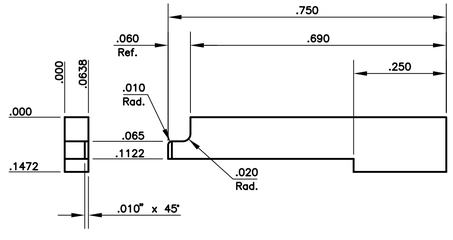

Enlarged 5 To 1 → 28 Lifter Insert 1 req.d
M–2 Rc 60–62

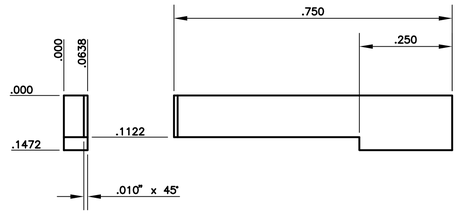

Enlarged 5 To 1 → 274 Lifter Insert 1 req.d
M–2 Rc 60–62

Advanced Designs, Inc. Powers Lake, Wis.	
CUST.	Your Customer
CAD FILE: CONTACT–18	DATE
DRAWN BY: M. Dennis	05–17–08
CHECKED: M. Dennis	05–17–08
APPROVED: –	02–01–06
PART NO.	87654321
PART NAME	Contact, Changeover
SHT. NO.	18 of 43
SCALE	1 = 1
TOOL NO.	05–500

www.diedesigner.com

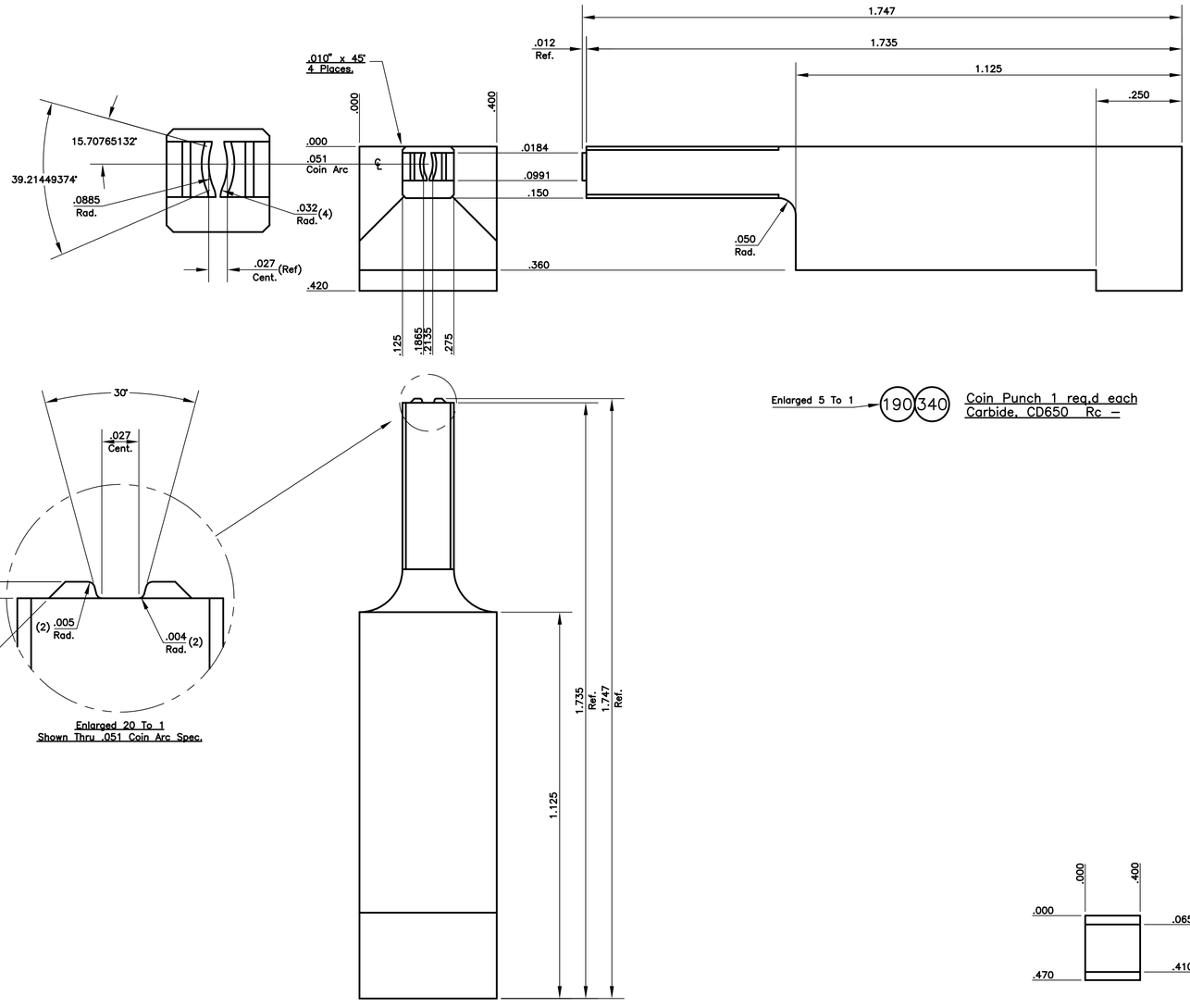

Enlarged 20 To 1
Shown Thru .051 Coin Arc Spec.

Enlarged 5 To 1 → (190)(340) Coin Punch 1 req.d each
Carbide, CD650 Rc –

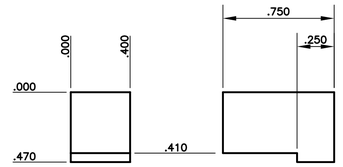

(271) Coin Anvil 1 req.d
Carbide, CD650 Rc –

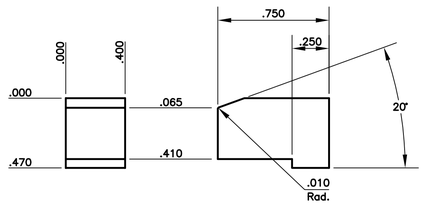

(25) Coin Anvil 1 req.d
Carbide, CD650 Rc –

Advanced Designs, Inc. Powers Lake, Wis.			
CUST. Your Customer			
CAD FILE:	CONTACT-19	DATE	SHT. NO. 19 of 43
DRAWN BY:	M. Dennis	05-17-08	
CHECKED:	M. Dennis	05-17-08	SCALE 2 = 1
APPROVED:	–	02-01-06	
PART NO.	87654321		TOOL NO. 05-500
PART NAME	Contact, Changeover		

www.diedesigner.com

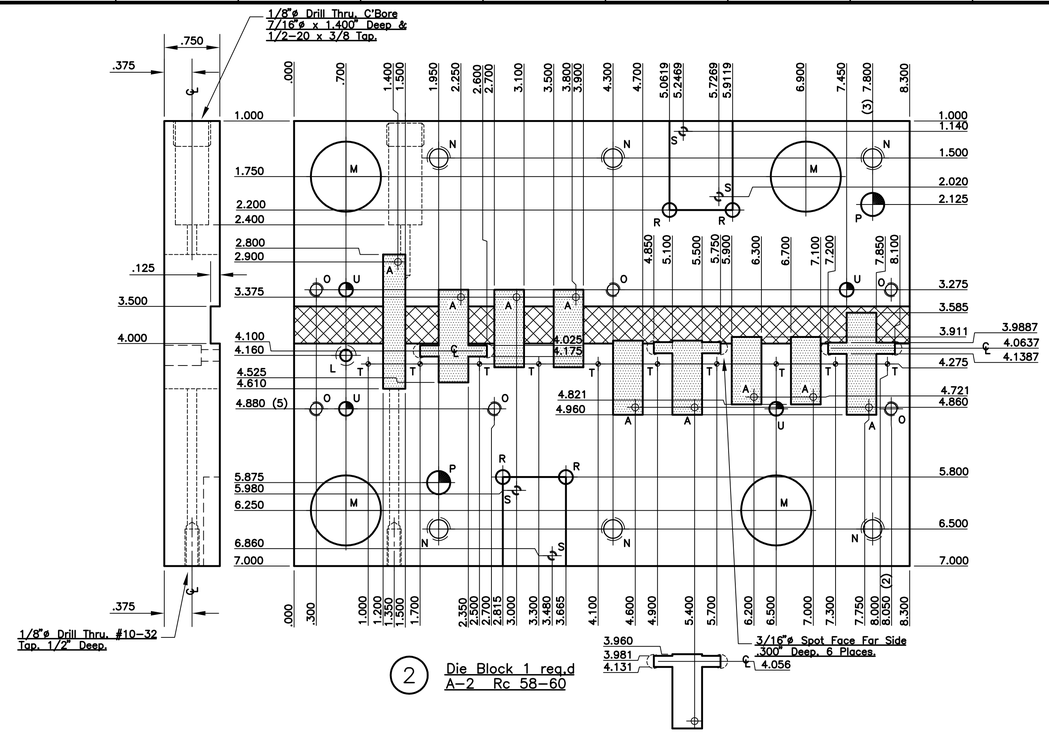

2 Die Block 1 req.d
A-2 Rc 58-60

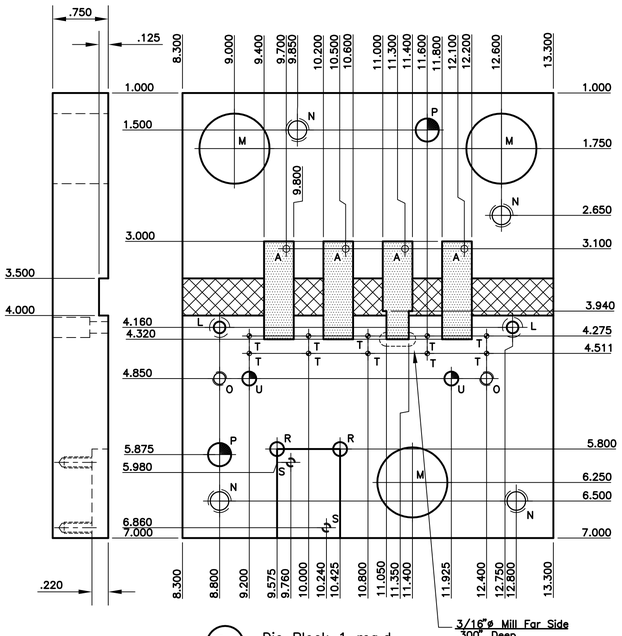

34 Die Block 1 req.d
A-2 Rc 58-60

Hole Data
A = 3/32"ø Wire Start Hole.
B = 1/16"ø Wire Start Hole.
C = 5/64"ø Wire Start Hole.
D = 5/32"ø Drill Thru.
E = 3/32"ø Drill Thru.
F = 7/32"ø Drill Thru.
G = Drill & C'Bore Far Side For #8-32 SHCS.
H = Drill & C'Bore Far Side For 5/16-18 SHCS.
I = 11/32"ø Drill Thru.
J = 3/4"ø Drill Thru, C'Bore 1 1/8"ø x .500" Deep.
K = .5118"ø Hole Thru. (P.F. Scr. Dowel)
L = .1570"ø Thru, C'Bore Far Side 17/64"ø x .500" Deep.
M = .9448"ø Hole Thru. (P.F. Fibro Bush)
N = Drill & Tap Far Side For 5/16-18 Thread.
O = Drill & Tap For #10-32 Thread.
P = 5/16"ø Dowel Thru.
Q = Drill Thru & Tap Far Side for 5/16-24 Unified Screw Plug.
R = 3/16"ø Drill x 1/4" Deep.
S = Drill & Tap Far Side For #5-40 Thread.
T = .0630"ø Pilot Hole.
U = 3/16"ø Dowel Thru.

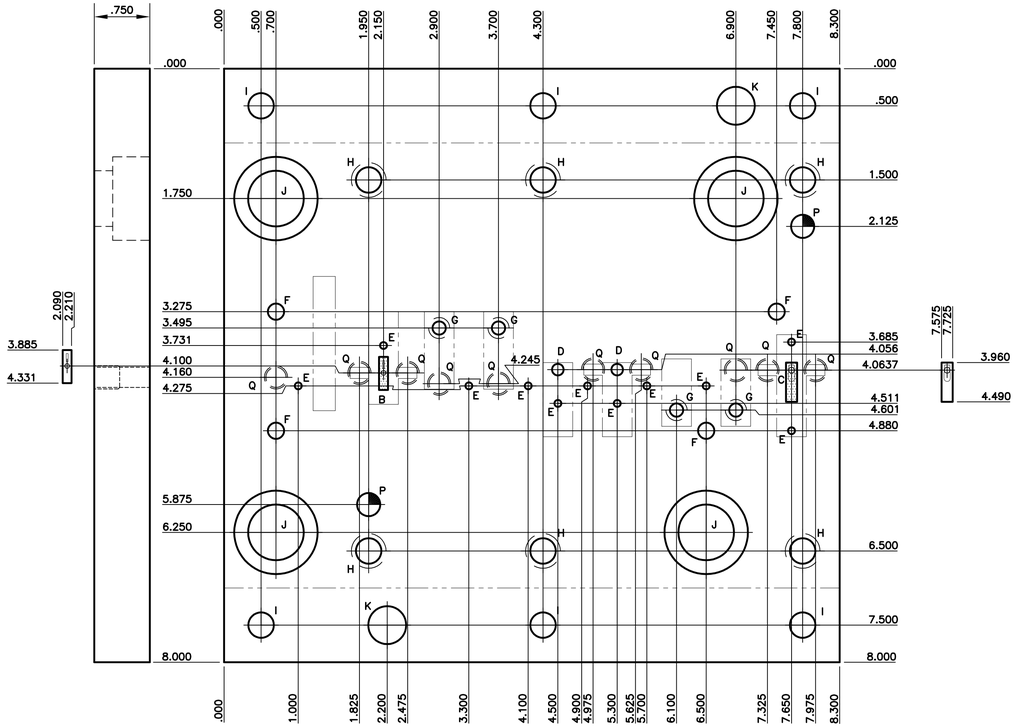

3 Backup Plate 1 req.d
A-2 Rc 58-60

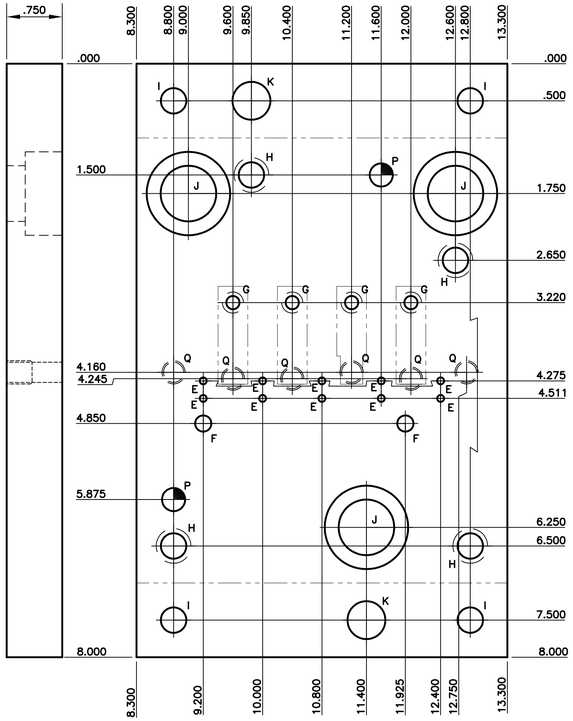

35 Backup Plate 1 req.d
A-2 Rc 58-60

Advanced Designs, Inc. Powers Lake, Wis.			
CUST.	Your Customer		
CAD FILE:	CONTACT-20	DATE	SHT. NO. 20 of 43
DRAWN BY:	M. Dennis	05-17-08	
CHECKED:	M. Dennis	05-17-08	SCALE 1 = 1
APPROVED:	-	02-01-06	
PART NO.	87654321		TOOL NO. 05-500
PART NAME	Contact, Changeover		

www.diedesigner.com

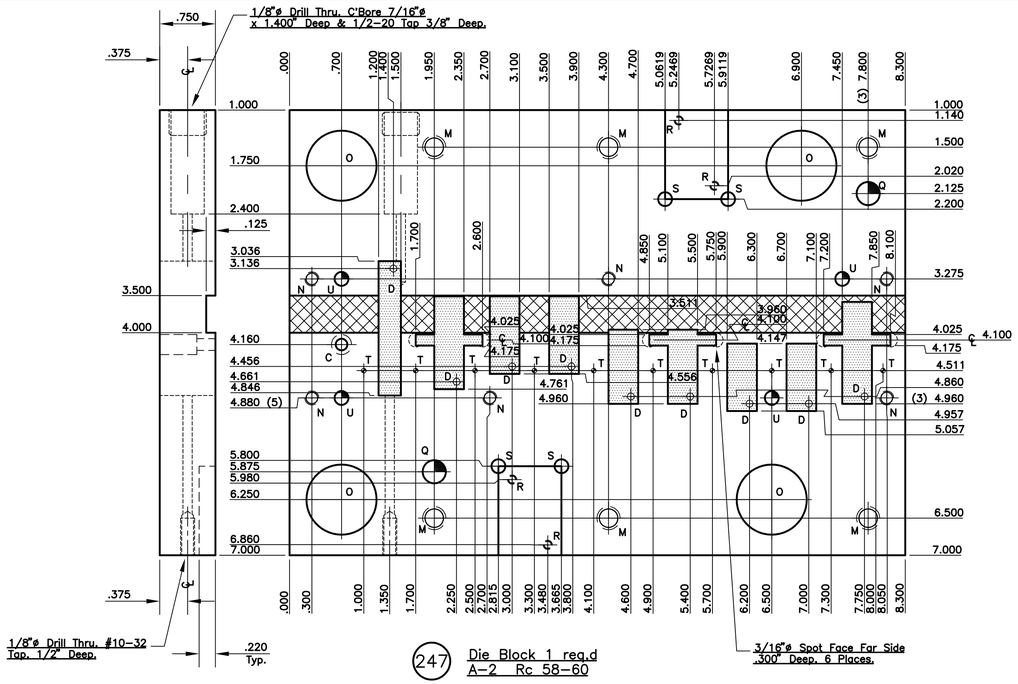

247 Die Block 1 req.d
A-2 Rc 58-60

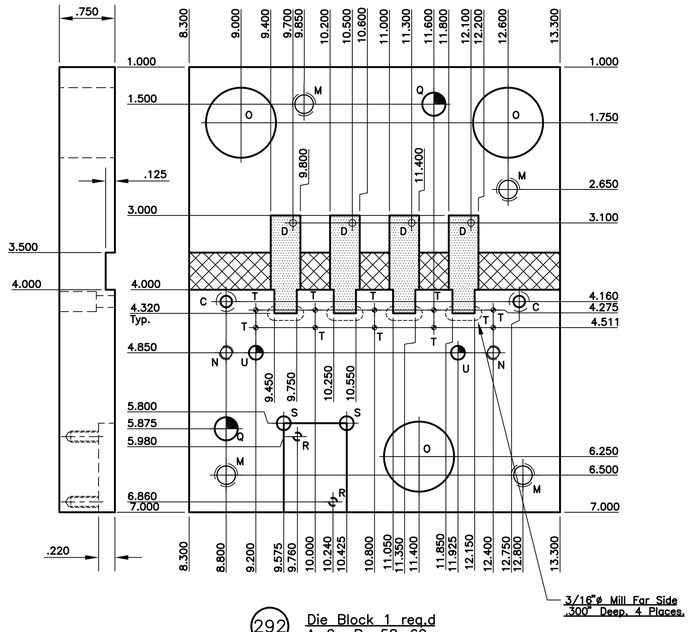

292 Die Block 1 req.d
A-2 Rc 58-60

Hole Data
A = 1/16"ø Wire Start Hole.
B = 5/64"ø Wire Start Hole.
C = .1570"ø Thru, C'Bore Far Side 17/64"ø x .500" Deep.
D = 3/32"ø Wire Start Hole.
E = 7/32"ø Drill Thru.
F = 5/32"ø Drill Thru.
G = 3/32"ø Drill Thru.
H = Drill & C'Bore Far Side For #8-32 SHCS.
I = Drill & C'Bore Far Side For 5/16-18 SHCS.
J = 11/32"ø Drill Thru.
K = 3/4"ø Drill Thru, C'Bore 1 1/8"ø x .500" Deep.
L = .5118"ø Hole Thru. (P.F. Scr. Dowel)
M = Drill & Tap Far Side For 5/16-18 Thread.
N = Drill & Tap For #10-32 Thread.
O = .9448"ø Hole Thru. (P.F. Fibro Bush)
P = Drill Thru & Tap Far Side for 5/16-24 Unified Screw Plug.
Q = 5/16"ø Dowel Thru.
R = Drill & Tap Far Side For #5-40 Thread.
S = 3/16"ø Drill x 1/4" Deep.
T = .0630"ø Pilot Hole.
U = 3/16"ø Dowel Thru.

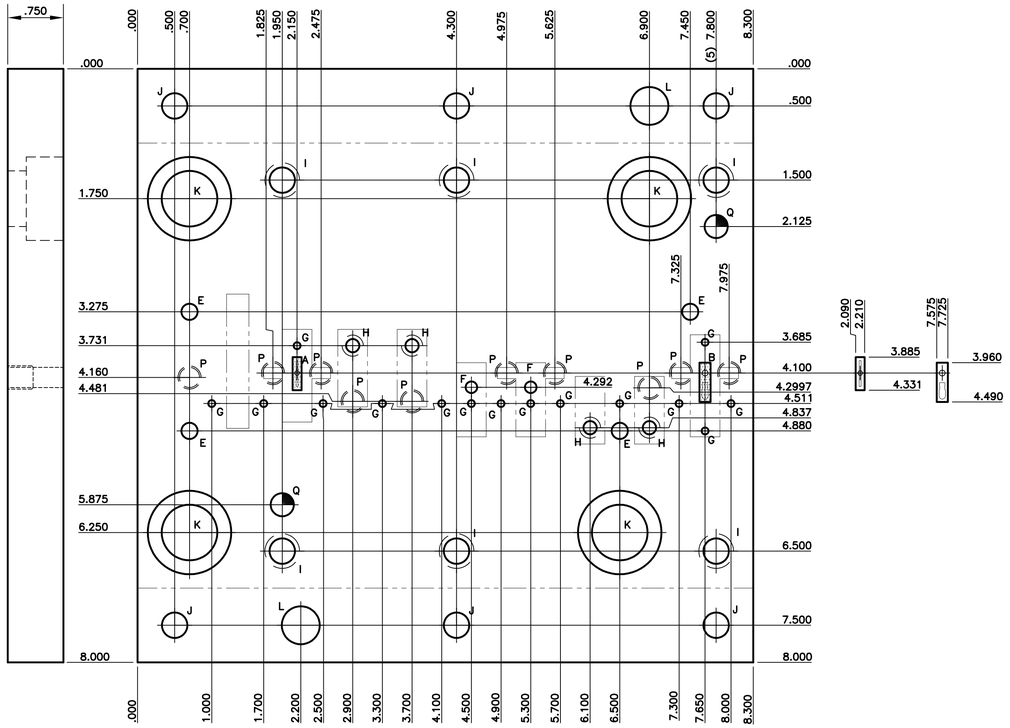

248 Backup Plate 1 req.d
A-2 Rc 58-60

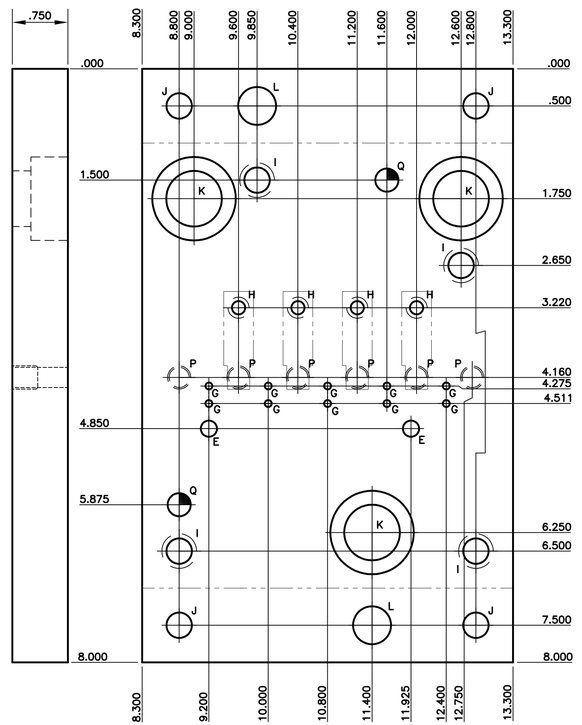

293 Backup Plate 1 req.d
A-2 Rc 58-60

Advanced Designs, Inc.	
Powers Lake, Wis.	
CUST.	Your Customer
CAD FILE: CONTACT-21	DATE
DRAWN BY: M. Dennis	05-17-08
CHECKED: M. Dennis	05-17-08
APPROVED: -	02-01-06
SHT. NO.	21 of 43
SCALE	1 = 1
PART NO.	87654321
PART NAME	Contact, Changeover
TOOL NO.	05-500

www.diedesigner.com

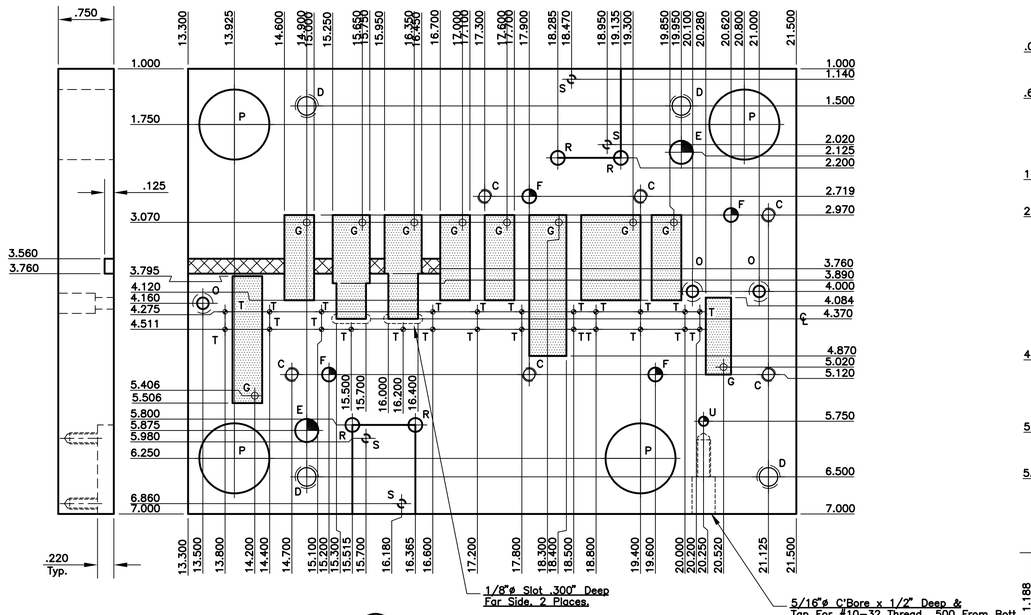

49 Die Block 1 req.d
A–2 Rc 58–60

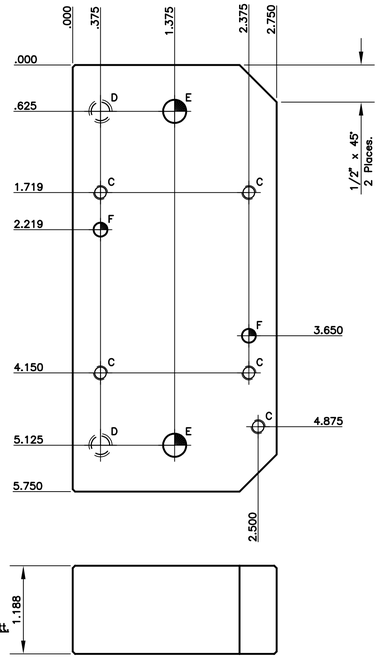

90 Spacer 1 req.d
A–2 Rc 58–60

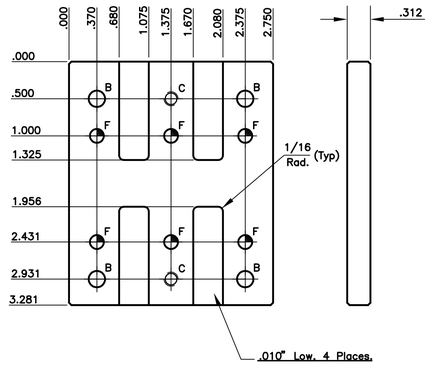

92 Stock Shelf 1 req.d
A–2 Rc 58–60

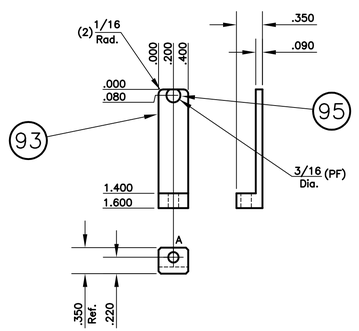

93 Stock Guide 4 req.d
A–2 Rc 58–60

95 Wear Botton 4 req.d
Carbide, CD650 Rc –

Hole Data
A = 9/64"ø Drill Thru.
B = 7/32"ø Drill Thru.
C = Drill & Tap For #10–32 Thread.
D = Drill & Tap Far Side For 5/16–18 Thread.
E = 5/16"ø Dowel Thru.
F = 3/16"ø Dowel Thru.
G = 3/32"ø Wire Start Hole.
H = 5/32"ø Drill Thru.
I = 3/32"ø Drill Thru.
J = Drill & C'Bore Far Side For #8–32 SHCS.
K = Drill & C'Bore Far Side For 5/16–18 SHCS.
L = 11/32"ø Drill Thru.
M = 3/4"ø Drill Thru, C'Bore 1 1/8"ø x .500" Deep.
N = .5118"ø Hole Thru. (P.F. Dowel Scr.)
O = .1570"ø Thru, C'Bore Far Side 17/64"ø x .500" Deep.
P = .9448"ø Hole Thru. (P.F. Fibro Bush)
Q = Drill & Tap for 5/16–24 Unified Screw Plug.
R = 3/16"ø Drill x 1/4" Deep.
S = Drill & Tap Far Side For #5–40 Thread.
T = .0630"ø Pilot Hole.
U = 1/8"ø Dowel Thru.

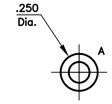

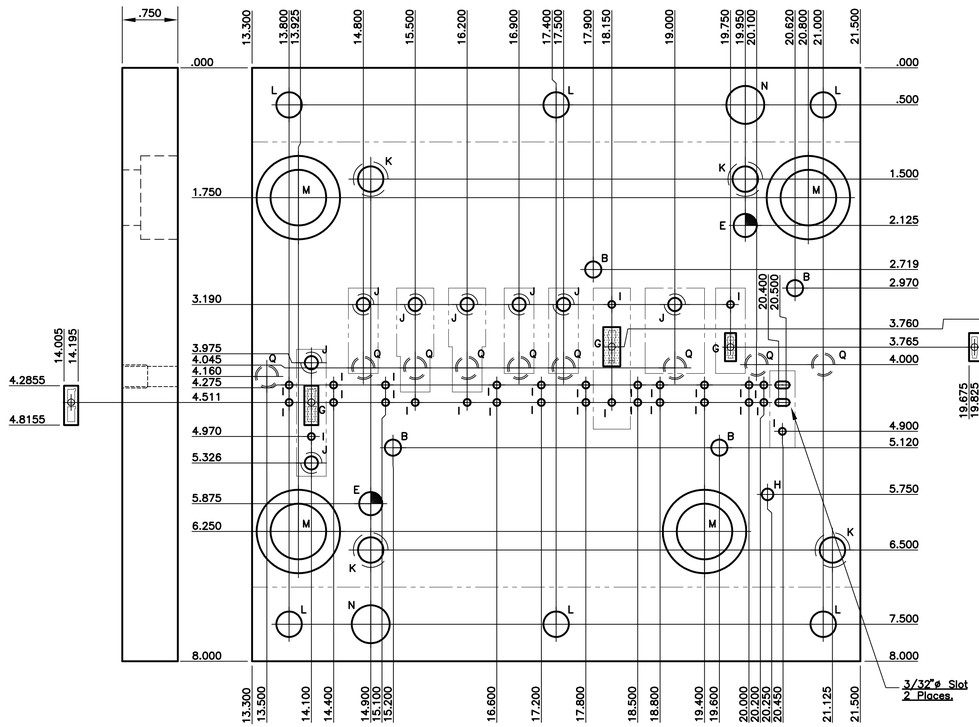

48 Backup Plate 1 req.d
A–2 Rc 58–60

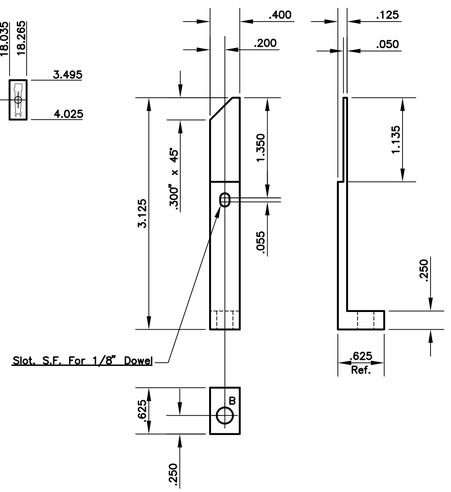

114 First Stop 1 req.d
A–2 Rc 58–60

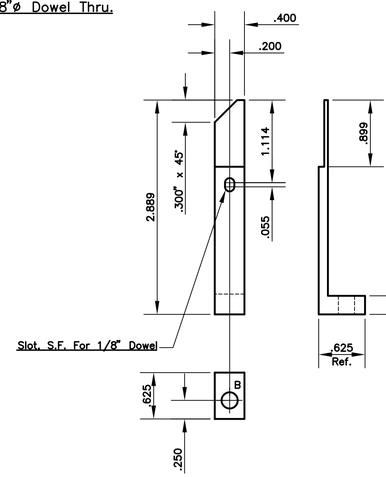

311 First Stop 1 req.d
A–2 Rc 58–60

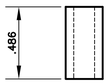

313 Spacer 2 req.d
A–2 Rc 58–60

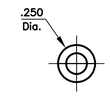

94 Spacer 6 req.d
A–2 Rc 58–60

Advanced Designs, Inc.
Powers Lake, Wis.

CUST. **Your Customer**

CAD FILE:	CONTACT–22	DATE	SHT. NO. 22 of 43
DRAWN BY:	M. Dennis	05–17–08	
CHECKED:	M. Dennis	05–17–08	SCALE 1 = 1
APPROVED:	–	02–01–06	
PART NO.	87654321		TOOL NO. 05–500
PART NAME	Contact, Changeover		

www.diedesigner.com

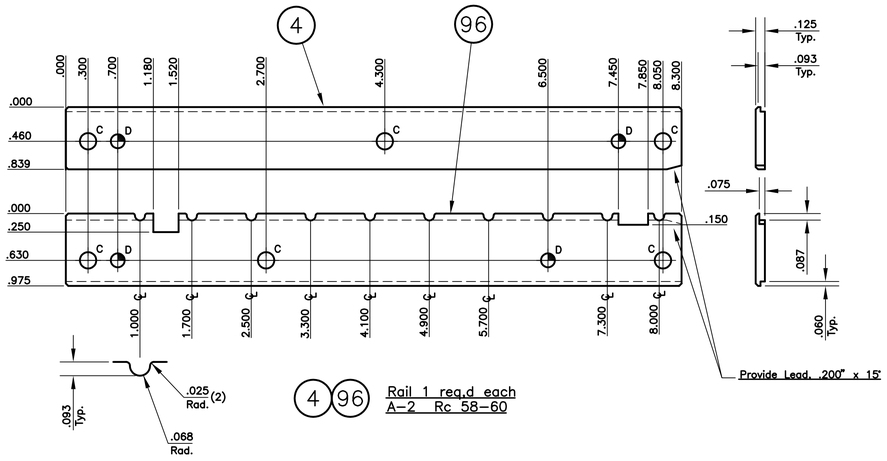

4 96 Rail 1 req.d each
A-2 Rc 58-60

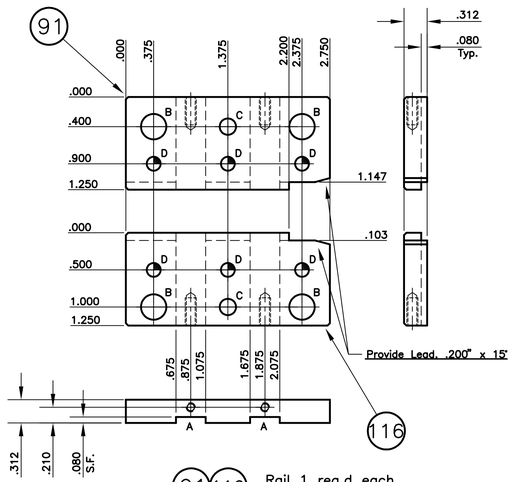

91 116 Rail 1 req.d each
A-2 Rc 58-60

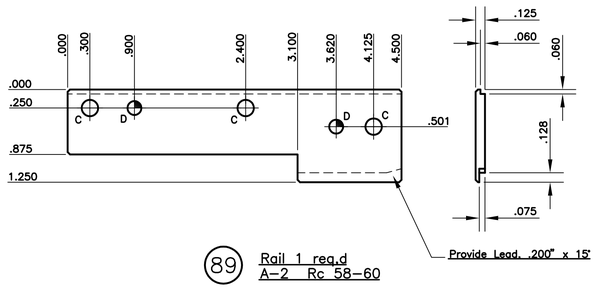

89 Rail 1 req.d
A-2 Rc 58-60

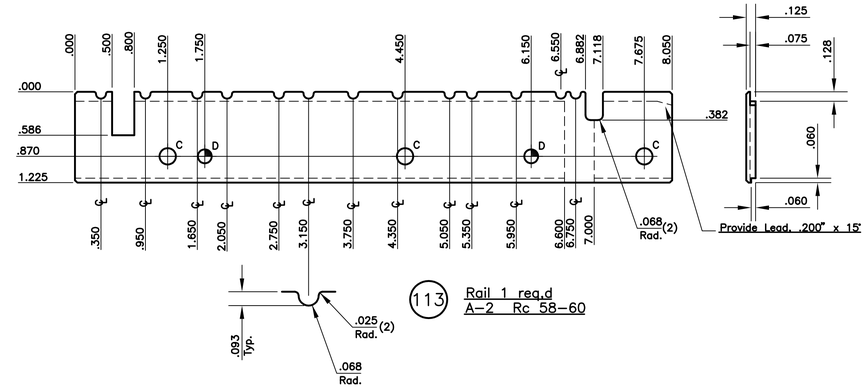

113 Rail 1 req.d
A-2 Rc 58-60

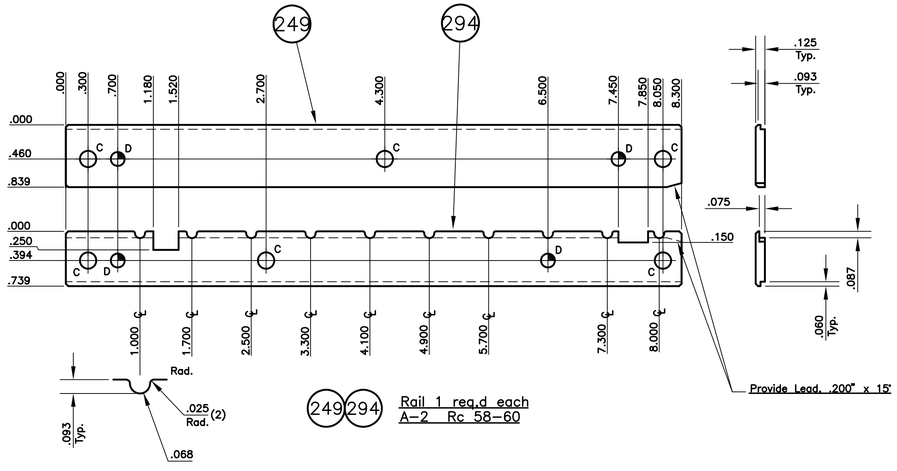

249 294 Rail 1 req.d each
A-2 Rc 58-60

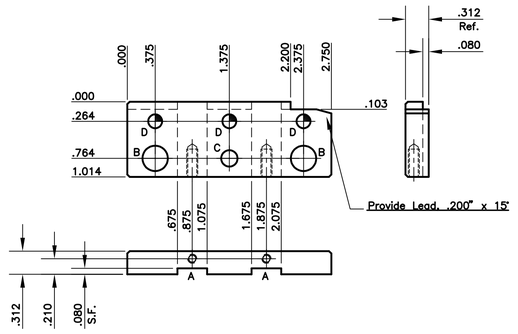

312 Rail 1 req.d
A-2 Rc 58-60

Hole Data
A = Drill & Tap For #5-40 Thread.
B = 11/32"ø Drill Thru.
C = 7/32"ø Drill Thru.
D = 3/16"ø Dowel Thru.

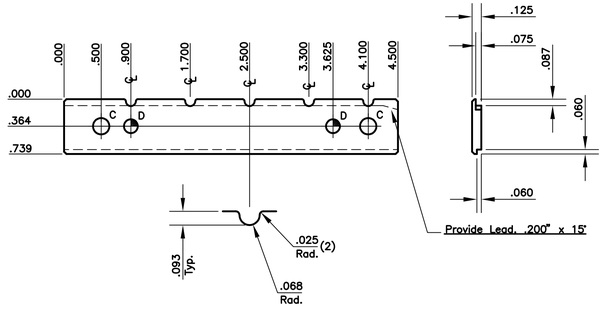

307 Rail 1 req.d
A-2 Rc 58-60

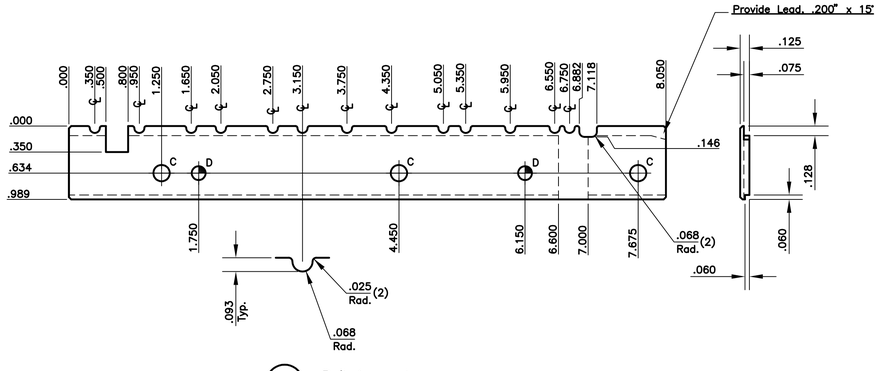

310 Rail 1 req.d
A-2 Rc 58-60

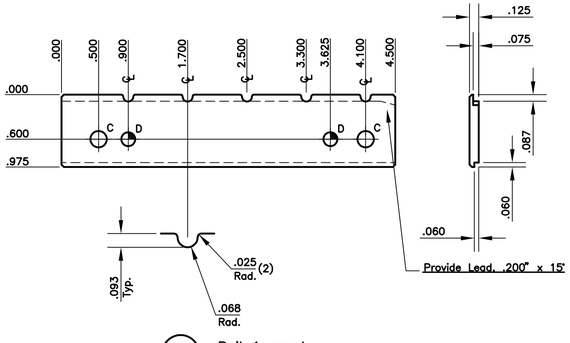

110 Rail 1 req.d
A-2 Rc 58-60

Advanced Designs, Inc. Powers Lake, Wis.			
CUST.	Your Customer		
CAD FILE:	CONTACT-23	DATE	SHT. NO. 23 of 43
DRAWN BY:	M. Dennis	05-17-08	
CHECKED:	M. Dennis	05-17-08	SCALE 1 = 1
APPROVED:	-	02-01-06	
PART NO.	87654321		TOOL NO. 05-500
PART NAME	Contact, Changeover		

www.diedesigner.com

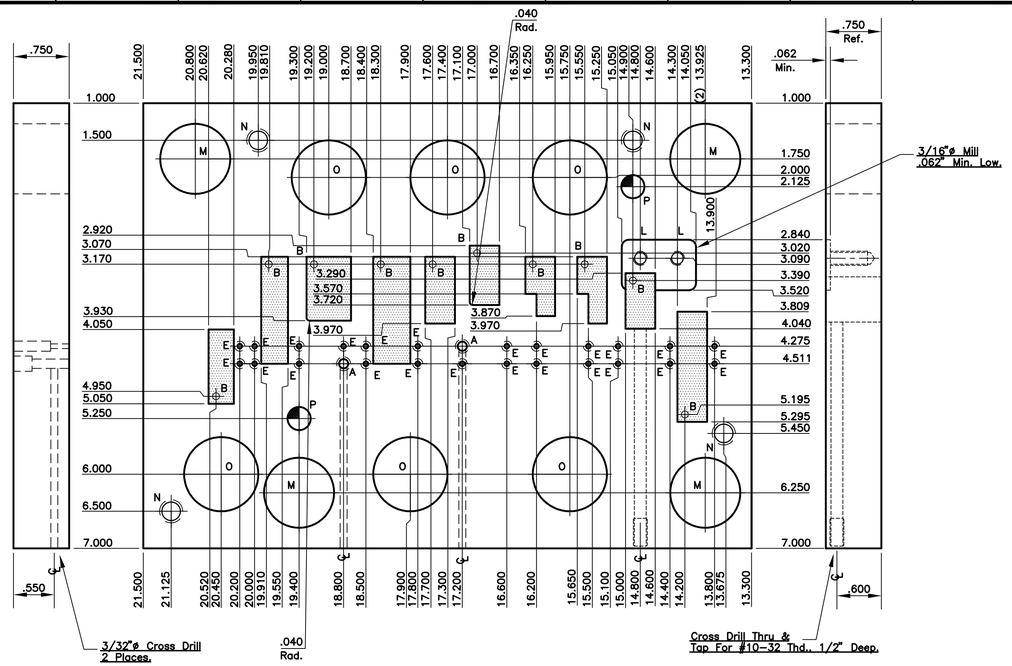

(123) Punch Pad 1 req.d
A-2 Rc 58-60

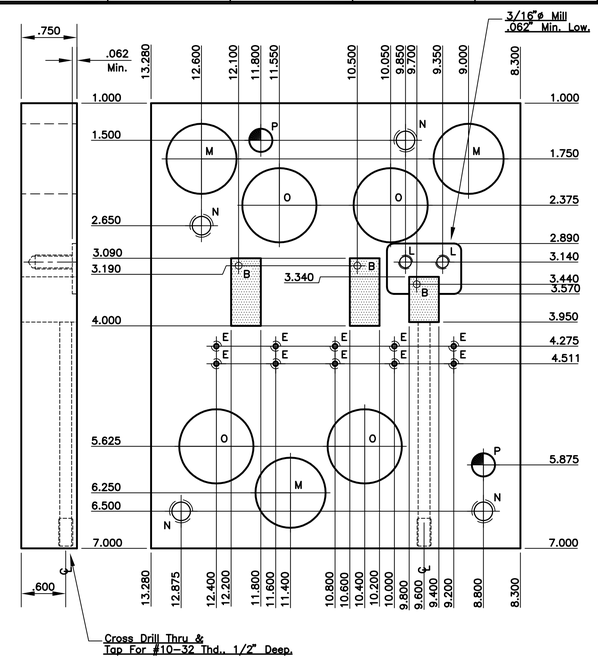

(171) Punch Pad 1 req.d
A-2 Rc 58-60

Hole Data
A = .1250"ø Thru (S.F. Micro), C'Bore Far Side 3/16"ø x .250" Deep.
B = 3/32"ø Wire Start Hole.
C = Drill & Tap Far Side For 1/4-20 Thread.
D = Drill Thru & Tap Far Side For #8-32 Thread.
E = .0625"ø Thru (S.F. Pilots), C'Bore Far Side 9/64"ø x .500" Deep.
F = Drill & C'Bore Far Side For #10-32 SHCS.
G = Drill & C'Bore Far Side For #8-32 SHCS.
H = Drill & C'Bore Far Side For 5/16-18 SHCS.
I = 17/32"ø Thru, C'Bore 1"ø x .403" Deep.
J = .5117"ø Hole Thru. (P.F. Dowel Scr.)
K = 3/4"ø Drill Thru, C'Bore 1 1/8"ø x .500" Deep.
L = Drill & Tap For #10-32 Thread.
M = .9448"ø Hole Thru. (P.F. Fibro Bush)
N = Drill & Tap Far Side For 5/16-18 Thread.
O = 1"ø Drill Thru.
P = 5/16"ø Dowel Thru.
Q = 11/32"ø Drill Thru.

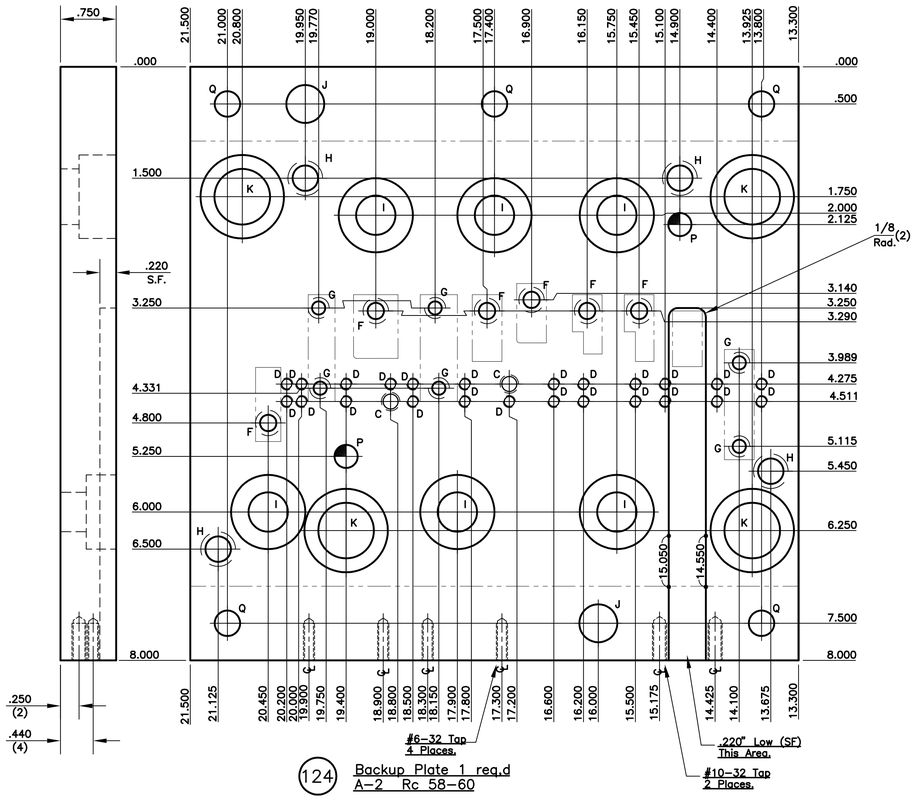

(124) Backup Plate 1 req.d
A-2 Rc 58-60

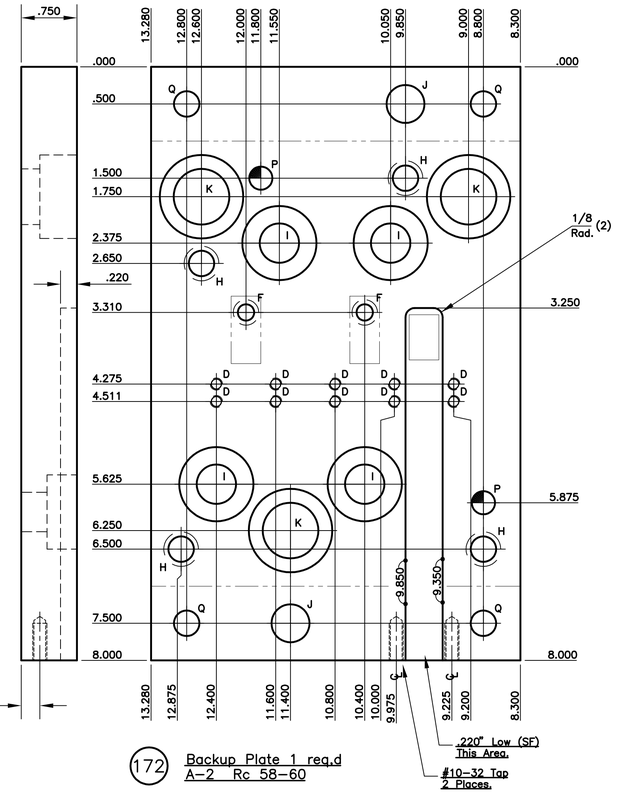

(172) Backup Plate 1 req.d
A-2 Rc 58-60

Advanced Designs, Inc. Powers Lake, Wis.			
CUST.	Your Customer		
CAD FILE:	CONTACT-24	DATE	SHT. NO. 24 of 43
DRAWN BY:	M. Dennis	05-17-08	
CHECKED:	M. Dennis	05-17-08	SCALE 1 = 1
APPROVED:	-	02-01-06	
PART NO.	87654321		TOOL NO. 05-500
PART NAME	Contact, Changeover		

www.diedesigner.com

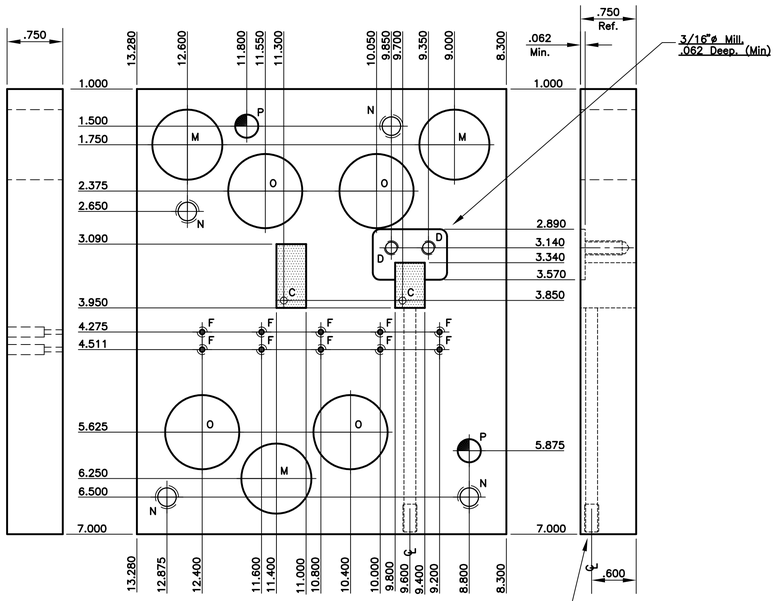

316 Punch Pad 1 req.d
A-2 Rc 58-60

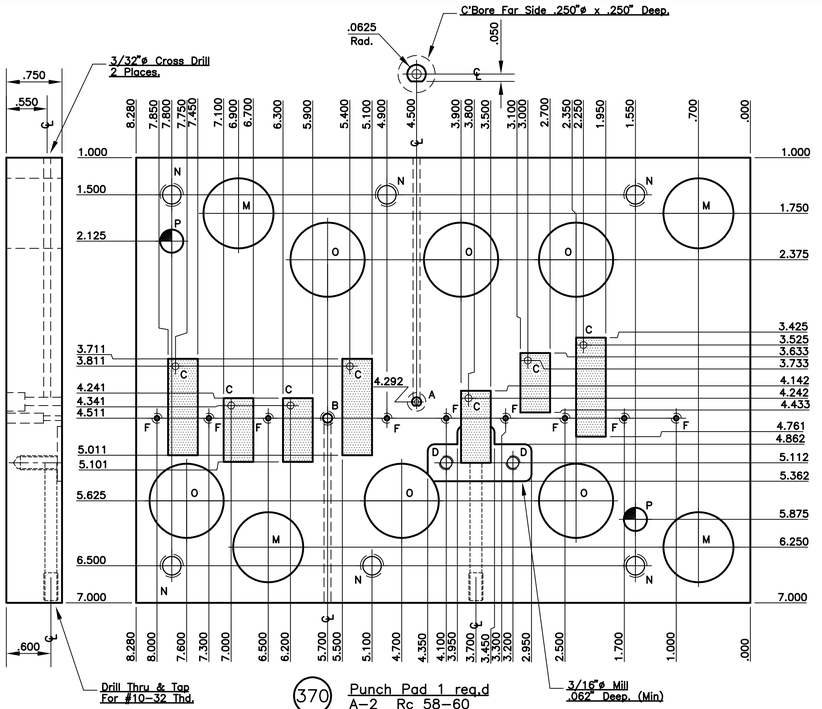

370 Punch Pad 1 req.d
A-2 Rc 58-60

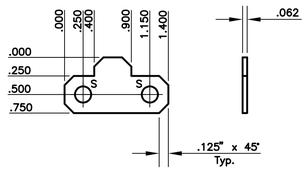

387 Spring Retainer 1 req.d
A-2 Rc 58-60

Hole Data
A = 1/16"ø Wire Start Hole.
B = .1250"ø Thru (SF Micro), C'Bore For Side 3/16"ø x .250" Deep.
C = 3/32"ø Wire Start Hole.
D = Drill & Tap For #10-32 Thread.
E = Drill Thru & Tap For Side For #8-32 Thread.
F = .0625"ø Thru (SF Pilot), C'Bore For Side 9/64"ø x .500" Deep.
G = Drill & C'Bore For Side For #8-32 SHCS.
H = Drill & C'Bore For Side For #10-32 SHCS.
I = Drill & C'Bore For Side For 5/16-18 SHCS.
J = 17/32"ø Drill Thru, C'Bore 1"ø x .403" Deep.
K = .5117"ø Hole Thru, (PF Srw. Dowel)
L = 3/4"ø Drill Thru, C'Bore 1 1/8"ø x .500" Deep.
M = .9448"ø Hole Thru, (PF Fibro Bush)
N = Drill & Tap For Side For 5/16-18 Thread.
O = 1"ø Drill Thru.
P = 5/16"ø Dowel Thru.
Q = Drill Thru & Tap For Side for 5/16-24 Unified Screw Plug.
R = 11/32"ø Drill Thru.
S = 7/32"ø Drill Thru.

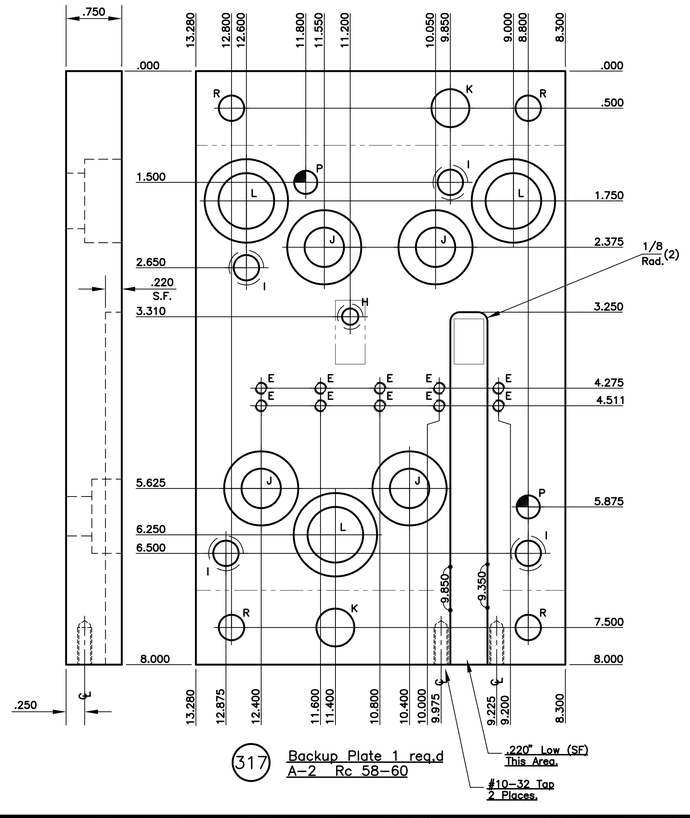

317 Backup Plate 1 req.d
A-2 Rc 58-60

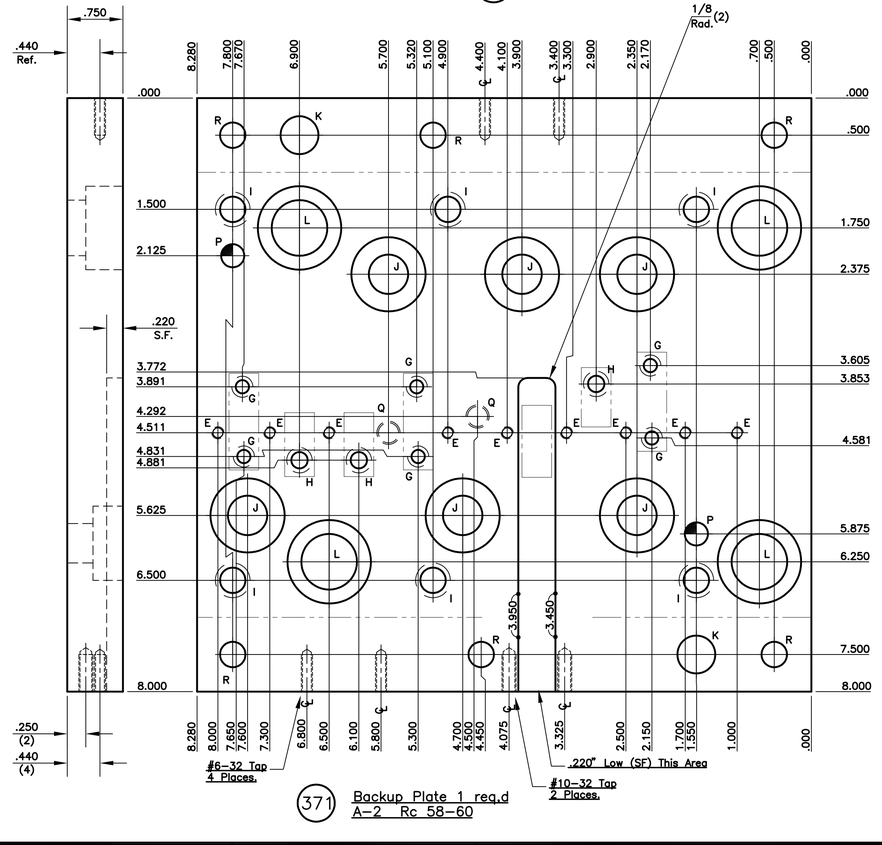

371 Backup Plate 1 req.d
A-2 Rc 58-60

Advanced Designs, Inc. Powers Lake, Wis.			
CUST.	Your Customer		
CAD FILE:	CONTACT-25	DATE	SHT. NO. 25 of 43
DRAWN BY:	M. Dennis	05-17-08	
CHECKED:	M. Dennis	05-17-08	SCALE 1 = 1
APPROVED:	–	02-01-06	
PART NO.	87654321		TOOL NO. 05-500
PART NAME	Contact, Changeover		

www.diedesigner.com

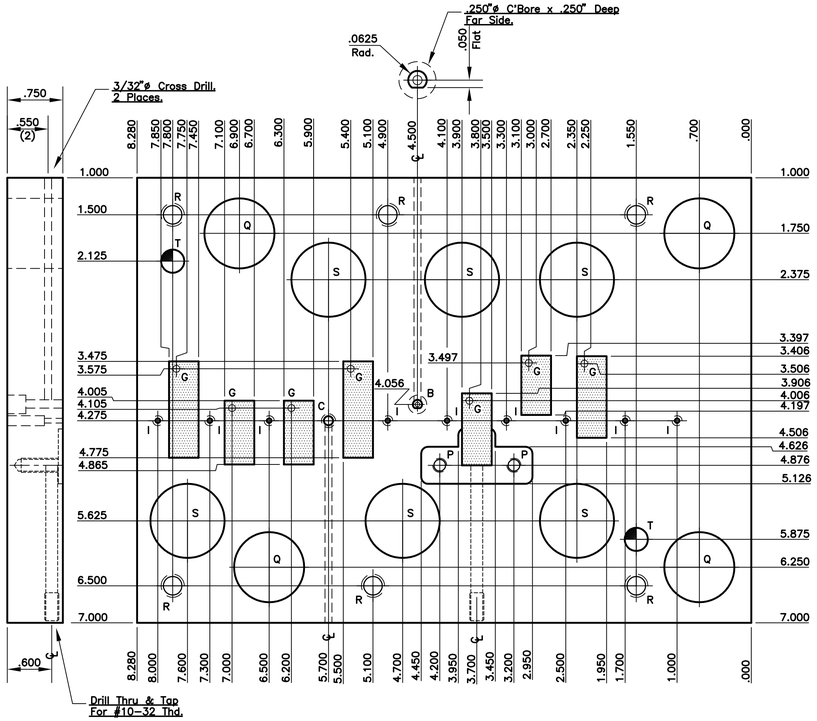

220 Punch Pad 1 req.d
A-2 Rc 58-60

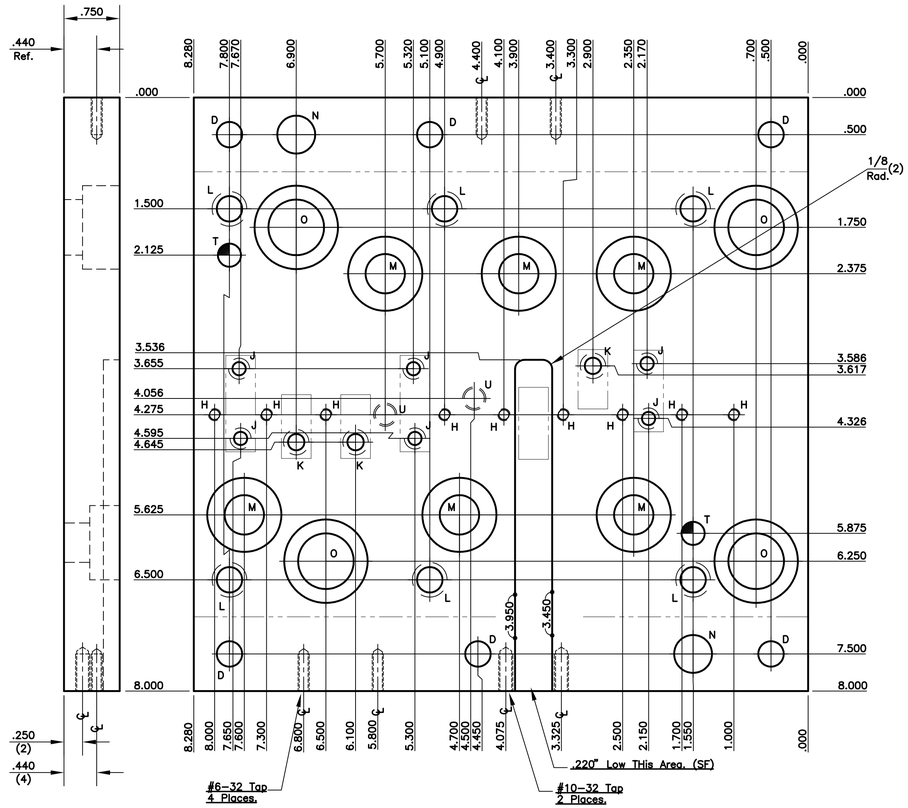

221 Backup Plate 1 req.d
A-2 Rc 58-60

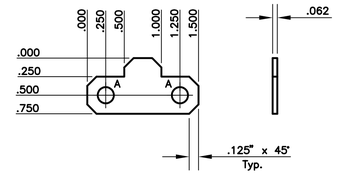

241 Spring Retainer 1 req.d
A-2 Rc 58-60

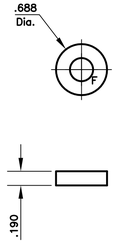

233 Spring Washer 16 req.d
S-7 Rc 48-50

374 Spring Washer 10 req.d
S-7 Rc 48-50

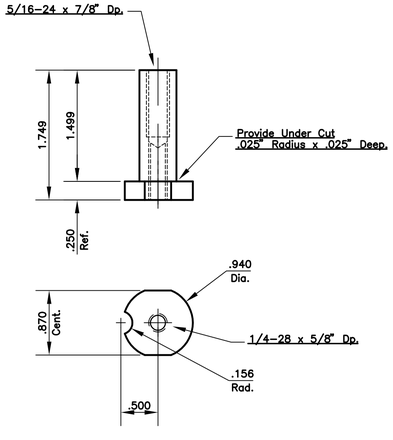

231 Spring Retainer 16 req.d
CRS Rc Case Hrd'n

372 Spring Retainer 10 req.d
CRS Rc Case Hrd'n

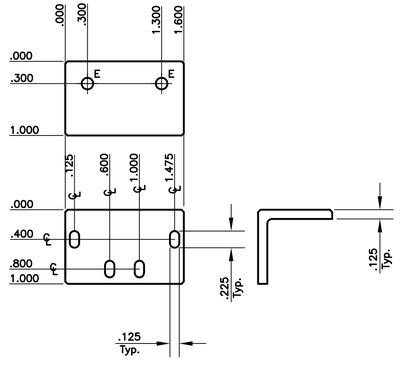

392 Micro Mount 5 req.d
CRS Rc –

Hole Data
A = 7/32"ø Drill Thru.
B = 1/16"ø Wire Start Hole.
C = .1250"ø Thru (SF Micro), C'Bore Far Side 3/16"ø x .250" Deep.
D = 11/32"ø Drill Thru.
E = 5/32"ø Drill Thru.
F = 5/16"ø Drill Thru.
G = 3/32"ø Wire Start Hole.
H = Drill Thru & Tap Far Side For #8-32 Thread.
I = .0625"ø Thru (SF Pilot), C'Bore Far Side 9/64"ø x .500" Deep.
J = Drill & C'Bore Far Side For #8-32 SHCS.
K = Drill & C'Bore Far Side For #10-32 SHCS.
L = Drill & C'Bore Far Side For 5/16-18 SHCS.
M = 17/32"ø Drill Thru, C'Bore 1"ø x .403" Deep.
N = .5117"ø Hole Thru. (P.F. Scr. Dowel)
O = 3/4"ø Drill Thru, C'Bore 1 1/8"ø x .500" Deep.
P = Drill & Tap For #10-32 Thread.
Q = .9448"ø Hole Thru. (P.F. Fibro Bush)
R = Drill & Tap Far Side For 5/16-18 Thread.
S = 1"ø Drill Thru.
T = 5/16"ø Dowel Thru.
U = Drill Thru & Tap Far Side for 5/16-24 Unified Screw Plug.

Advanced Designs, Inc. Powers Lake, Wis.			
CUST.	Your Customer		
CAD FILE:	CONTACT-26	DATE	SHT. NO. 26 of 43
DRAWN BY:	M. Dennis	05-17-08	
CHECKED:	M. Dennis	05-17-08	SCALE 1 = 1
APPROVED:	–	02-01-06	
PART NO.	87654321		TOOL NO. 05-500
PART NAME	Contact, Changeover		

www.diedesigner.com

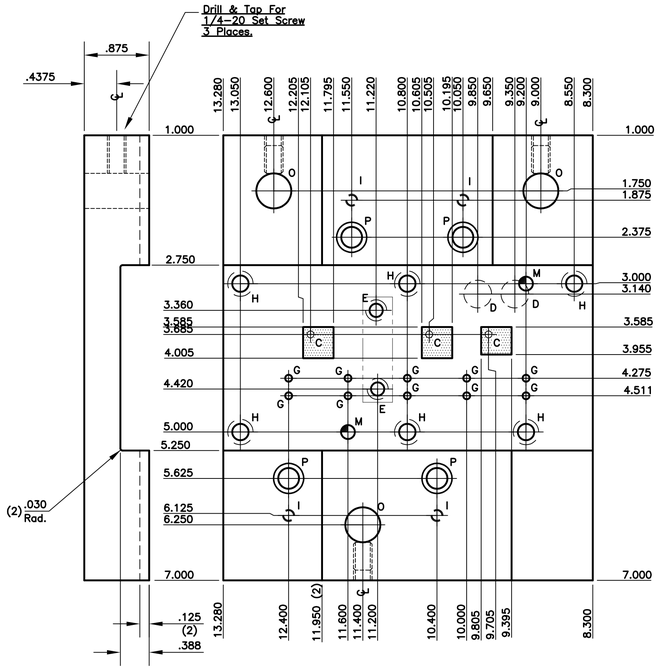

170 Stripper Yoke 1 req.d
A-2 Rc 58-60

Hole Data
A = .0630"ø Hole Thru. (For Pilots)
B = 1/16"ø Wire Start Hole.
C = 3/32"ø Wire Start Hole.
D = 3/8"ø Drill x 1/8" Deep, Far Side.
E = Drill & C'Bore Far Side For #8-32 SHCS.
F = 3/16"ø Drill Thru.
G = 3/32"ø Drill Thru.
H = Drill & C'Bore Far Side For #10-32 SHCS.
I = Drill & Tap Far Side For #8-32 Thread.
J = Drill & Tap Far Side For #10-32 Thread.
K = .0630"ø Thru & Drill Far Side 3/16"ø x 1/8" Dp.
L = 3/8"ø Drill Thru.
M = 3/16"ø Dowel Thru.
N = 11/32"ø Drill Thru.
O = .4724"ø Hole Thru. (P.F. Subliner)
P = Drill & C'Bore For 1/4-28 SHCS.

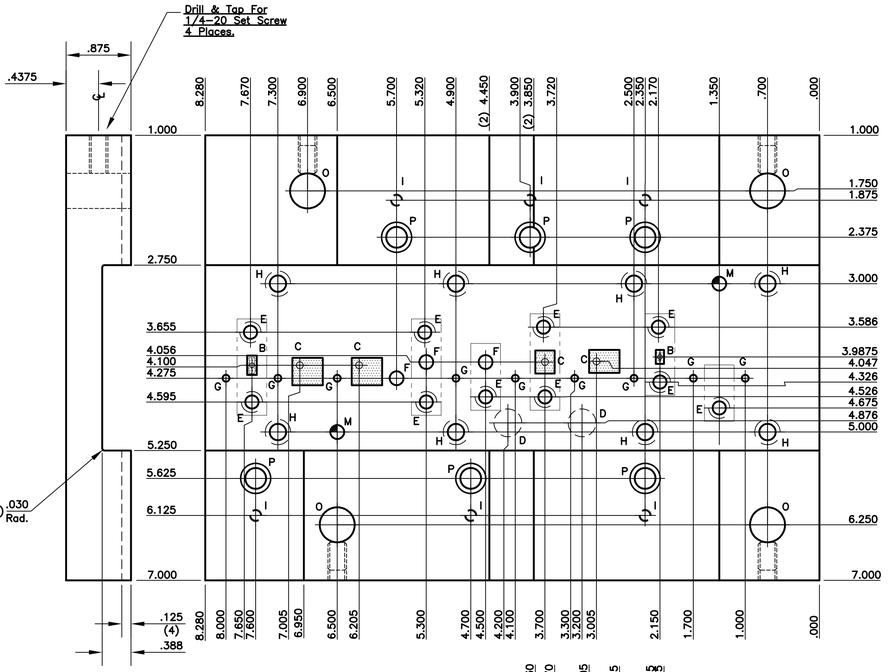

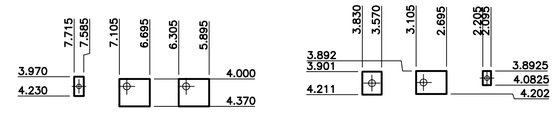

219 Stripper Yoke 1 req.d
A-2 Rc 58-60

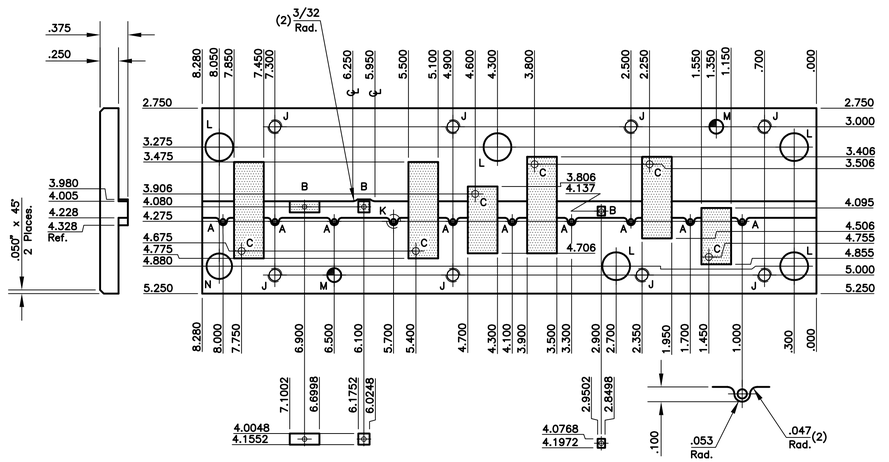

218 Stripper Face 1 req.d
A-2 Rc 58-60

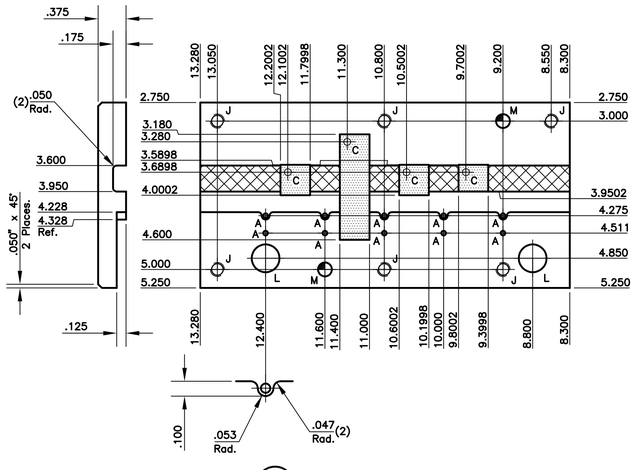

169 Stripper Face 1 req.d
A-2 Rc 58-60

Advanced Designs, Inc. **Powers Lake, Wis.**			
CUST.	**Your Customer**		
CAD FILE:	CONTACT-27	DATE	SHT. NO. 27 of 43
DRAWN BY:	M. Dennis	05-17-08	
CHECKED:	M. Dennis	05-17-08	SCALE 1 = 1
APPROVED:	-	02-01-06	
PART NO.	87654321		TOOL NO. 05-500
PART NAME	Contact, Changeover		

www.diedesigner.com

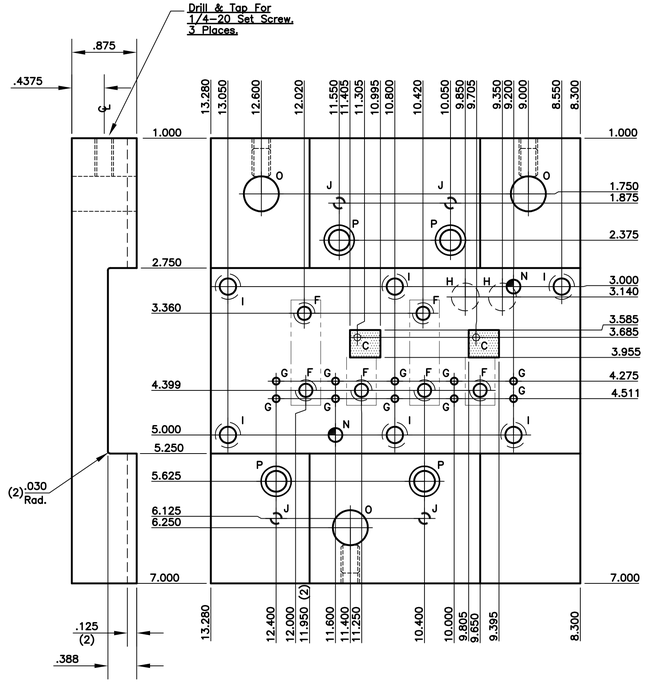

315 Stripper Yoke 1 req.d
A-2 Rc 58-60

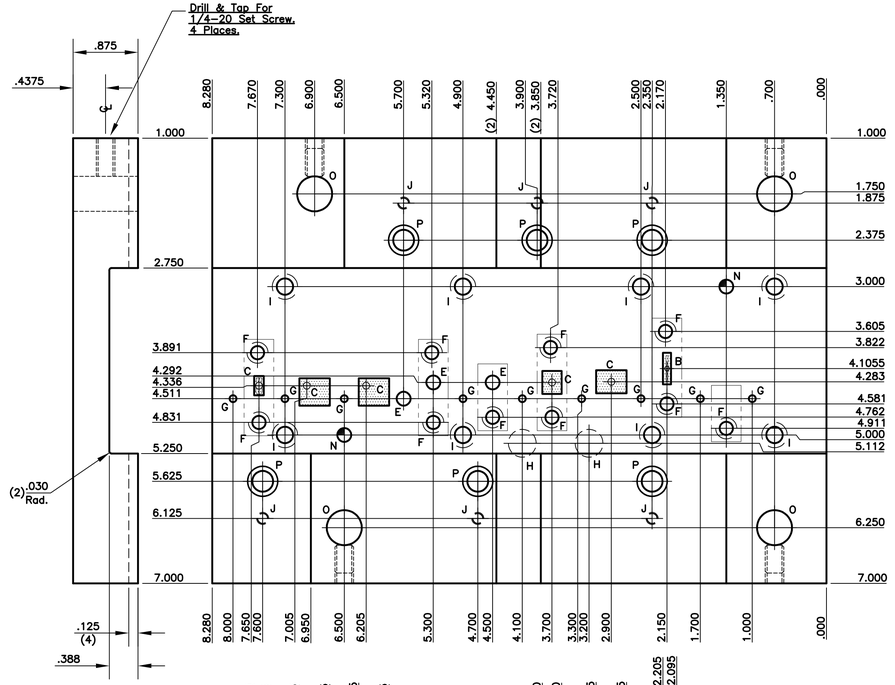

Hole Data
A = .0630"ø Hole Thru. (For Pilots)
B = 1/16"ø Wire Start Hole.
C = 3/32"ø Wire Start Hole.
D = 11/32"ø Drill Thru.
E = 3/16"ø Drill Thru.
F = Drill & C'Bore Far Side For #8-32 SHCS.
G = 3/32"ø Drill Thru.
H = 3/8"ø Drill x 1/8" Deep, Far Side.
I = Drill & C'Bore Far Side For #10-32 SHCS.
J = Drill & Tap Far Side For #8-32 Thread.
K = Drill & Tap Far Side For #10-32 Thread.
L = .0630"ø Thru & Drill Far Side 3/16"ø x 1/8" Dp.
M = 3/8"ø Drill Thru.
N = 3/16"ø Dowel Thru.
O = .4724"ø Hole Thru. (P.F. Subliner)
P = Drill & C'Bore For 1/4-28 SHCS.

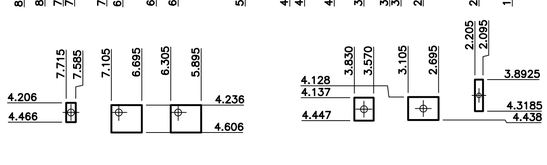

369 Stripper Yoke 1 req.d
A-2 Rc 58-60

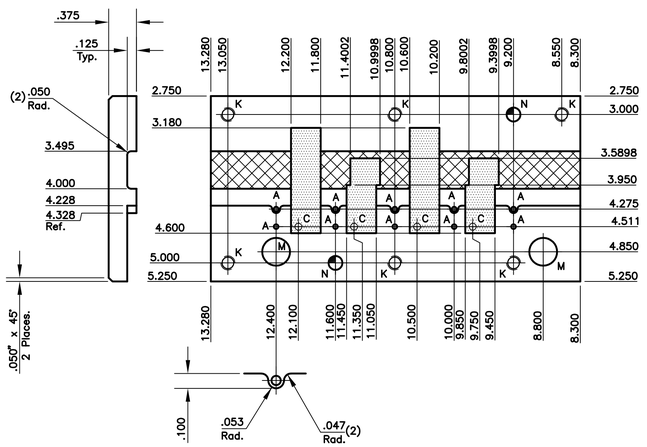

314 Stripper Face 1 req.d
A-2 Rc 58-60

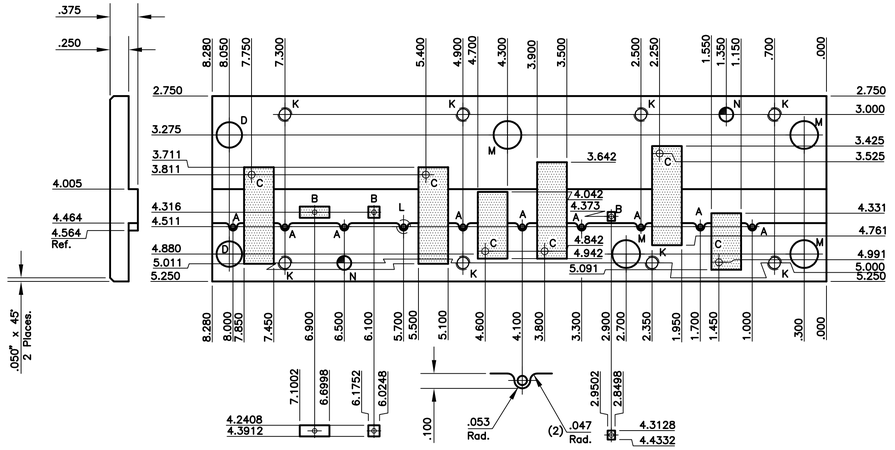

368 Stripper Face 1 req.d
A-2 Rc 58-60

Advanced Designs, Inc. Powers Lake, Wis.			
CUST.	Your Customer		
CAD FILE:	CONTACT-28	DATE	SHT. NO. 28 of 43
DRAWN BY:	M. Dennis	05-17-08	
CHECKED:	M. Dennis	05-17-08	SCALE 1 = 1
APPROVED:	–	02-01-06	
PART NO.	87654321		TOOL NO. 05-500
PART NAME	Contact, Changeover		

www.diedesigner.com

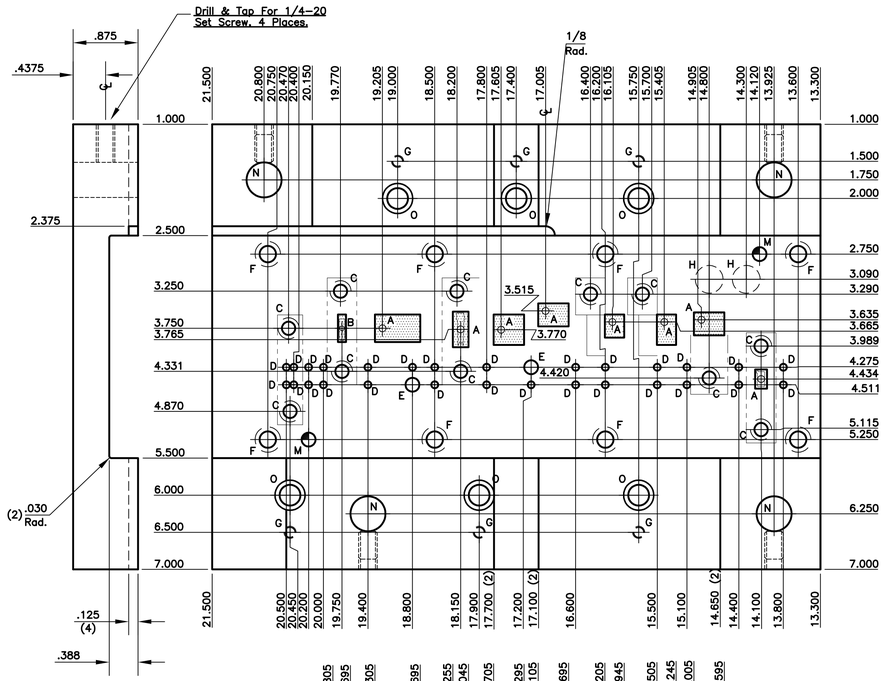

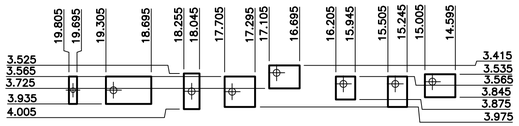

122 Stripper Yoke 1 req.d
A–2 Rc 58–60

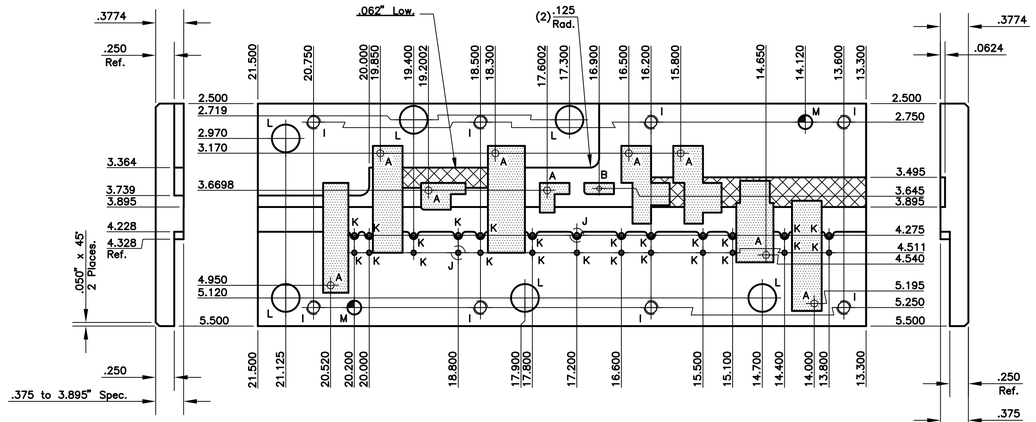

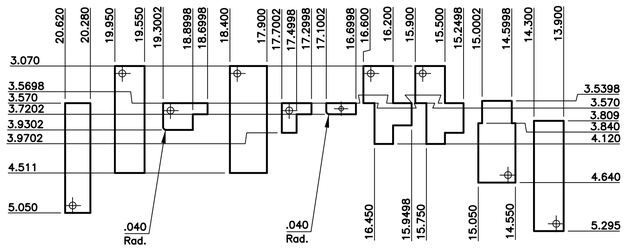

121 Stripper Face 1 req.d
A–2 Rc 58–60

Hole Data
A = 3/32"ø Wire Start Hole.
B = 1/16"ø Wire Start Hole.
C = Drill & C'Bore Far Side For #8–32 SHCS.
D = 3/32"ø Drill Thru.
E = 3/16"ø Drill Thru.
F = Drill & C'Bore Far Side For #10–32 SHCS.
G = Drill & Tap Far Side For #8–32 Thread.
H = 3/8"ø Drill x 1/8" Deep, Far Side.
I = Drill & Tap Far Side For #10–32 Thread.
J = .0630"ø Thru & Drill Far Side 3/16"ø x 1/8" Dp.
K = .0630"ø Hole Thru.
L = 3/8"ø Drill Thru.
M = 3/16"ø Dowel Thru.
N = .4724"ø Hole Thru.
O = Drill & C'Bore For 1/4–20 SHCS.

Advanced Designs, Inc. Powers Lake, Wis.	
CUST.	Your Customer
CAD FILE: CONTACT–29	DATE
DRAWN BY: M. Dennis	05–17–08
CHECKED: M. Dennis	05–17–08
APPROVED: –	02–01–06
SHT. NO. 29 of 43	
SCALE 1 = 1	
PART NO. 87654321	TOOL NO. 05–500
PART NAME Contact, Changeover	

www.diedesigner.com

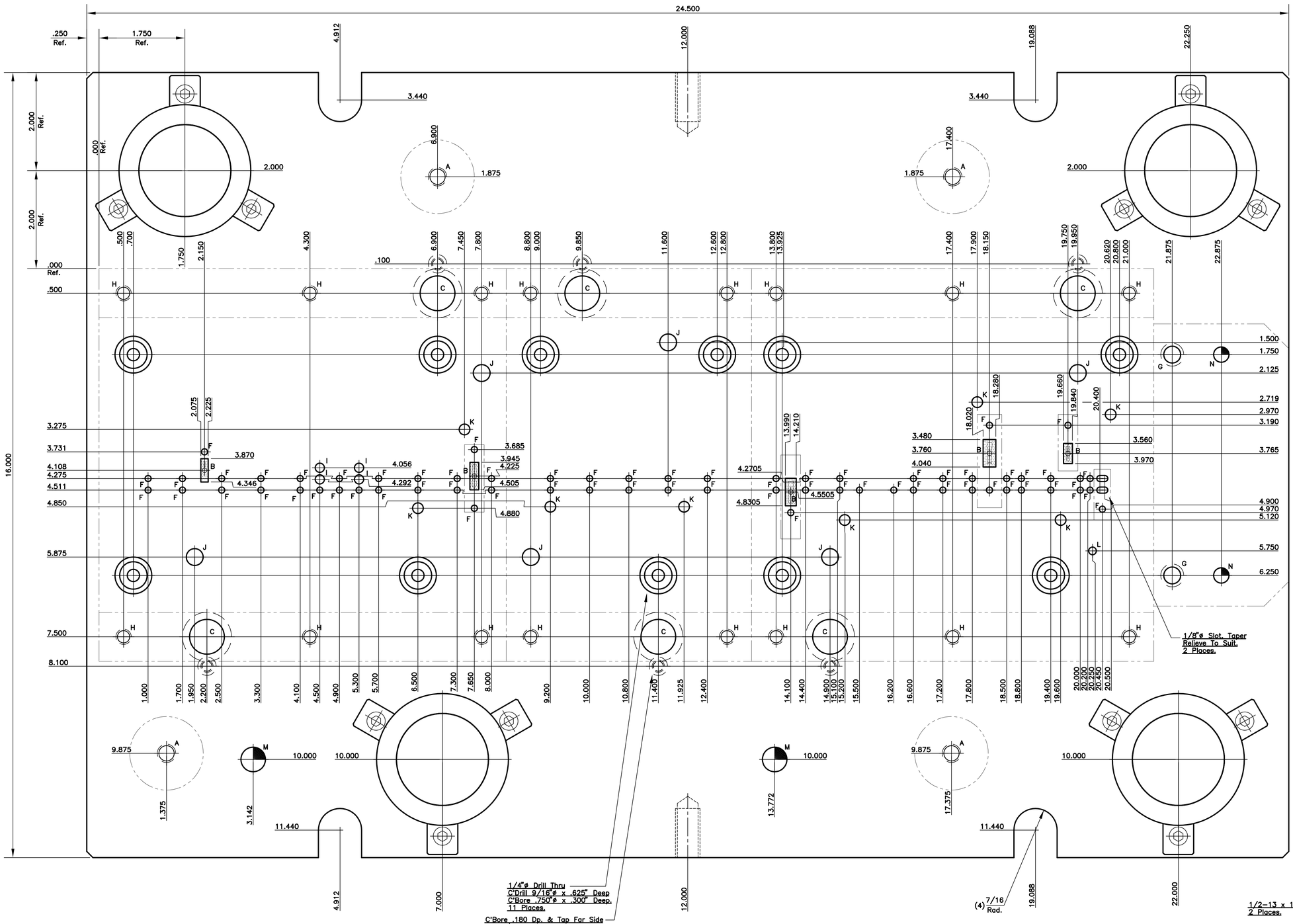

1 Die Shoe 1 req.d
Purchase Rc –

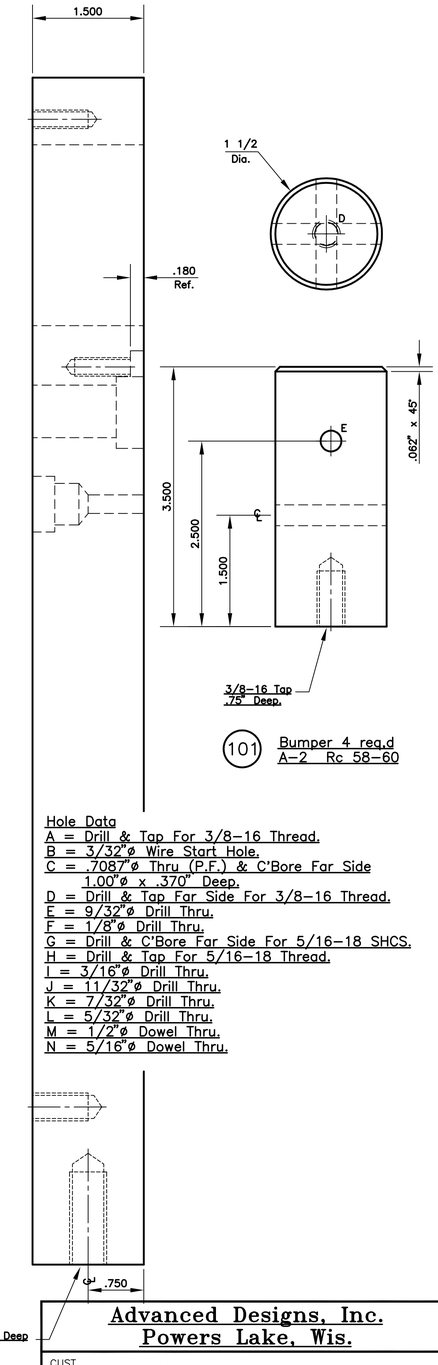

101 Bumper 4 req.d
A-2 Rc 58-60

Hole Data
A = Drill & Tap For 3/8-16 Thread.
B = 3/32"ø Wire Start Hole.
C = .7087"ø Thru (P.F.) & C'Bore Far Side 1.00"ø x .370" Deep.
D = Drill & Tap Far Side For 3/8-16 Thread.
E = 9/32"ø Drill Thru.
F = 1/8"ø Drill Thru.
G = Drill & C'Bore Far Side For 5/16-18 SHCS.
H = Drill & Tap For 5/16-18 Thread.
I = 3/16"ø Drill Thru.
J = 11/32"ø Drill Thru.
K = 7/32"ø Drill Thru.
L = 5/32"ø Drill Thru.
M = 1/2"ø Dowel Thru.
N = 5/16"ø Dowel Thru.

Advanced Designs, Inc.
Powers Lake, Wis.

CUST. Your Customer

CAD FILE:	CONTACT-30	DATE	SHT. NO. 30 of 43
DRAWN BY:	M. Dennis	05-17-08	
CHECKED:	M. Dennis	05-17-08	SCALE 1 = 1
APPROVED:	–	02-01-06	
PART NO.	87654321		TOOL NO. 05-500
PART NAME	Contact, Changeover		

www.diedesigner.com

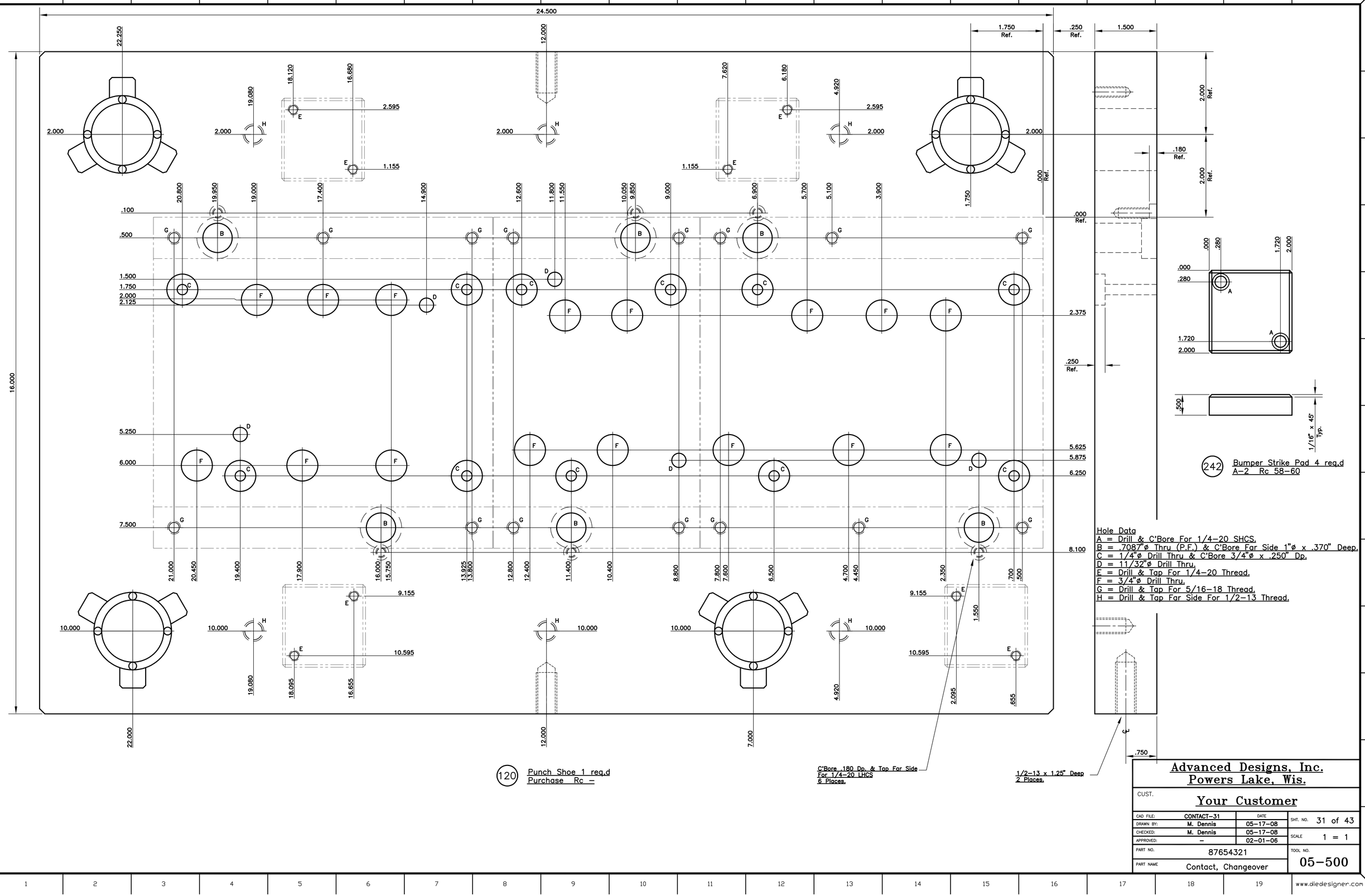

242 Bumper Strike Pad 4 req.d
A–2 Rc 58–60

Hole Data
A = Drill & C'Bore For 1/4–20 SHCS.
B = .7087"ø Thru (P.F.) & C'Bore Far Side 1"ø x .370" Deep.
C = 1/4"ø Drill Thru & C'Bore 3/4"ø x .250" Dp.
D = 11/32"ø Drill Thru.
E = Drill & Tap For 1/4–20 Thread.
F = 3/4"ø Drill Thru.
G = Drill & Tap For 5/16–18 Thread.
H = Drill & Tap Far Side For 1/2–13 Thread.

120 Punch Shoe 1 req.d
Purchase Rc –

C'Bore .180 Dp. & Tap Far Side For 1/4–20 LHCS 6 Places.

1/2–13 x 1.25" Deep 2 Places.

Advanced Designs, Inc.
Powers Lake, Wis.

CUST. **Your Customer**

CAD FILE:	CONTACT–31	DATE	SHT. NO. 31 of 43
DRAWN BY:	M. Dennis	05–17–08	
CHECKED:	M. Dennis	05–17–08	SCALE 1 = 1
APPROVED:	–	02–01–06	
PART NO.	87654321		TOOL NO. 05–500
PART NAME	Contact, Changeover		

www.diedesigner.com

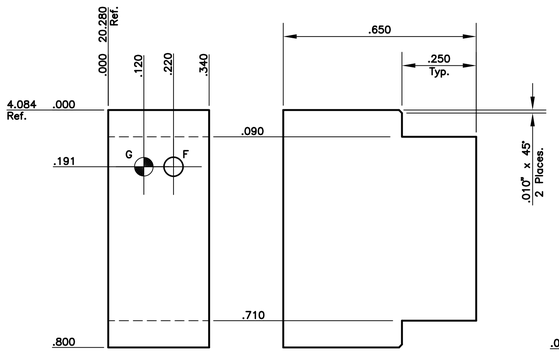

85 Die Insert 1 req.d
Carbide, CD650 Rc –

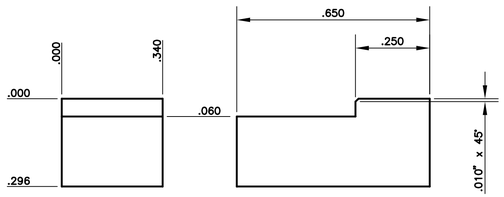

86 Change Over Insert 1 req.d
A–2 Rc 58–60

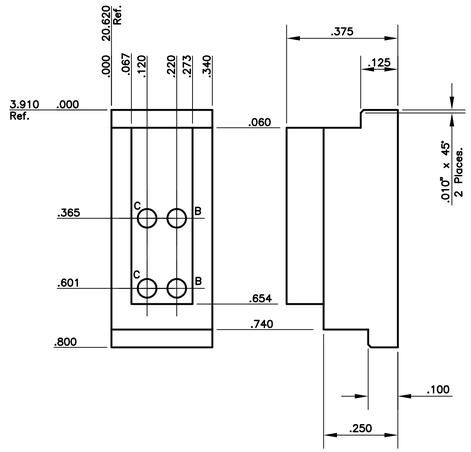

126 Stripper Insert 1 req.d
Carbide, CD650 Rc –

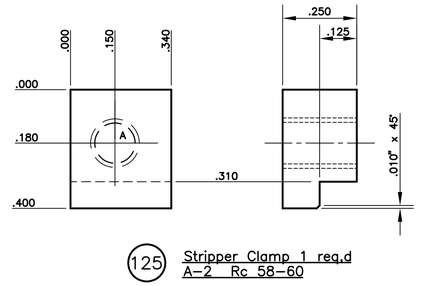

125 Stripper Clamp 1 req.d
A–2 Rc 58–60

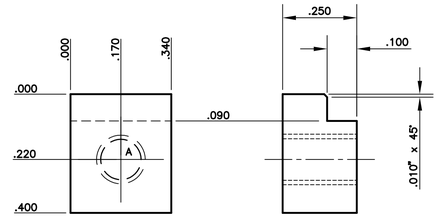

127 Stripper Clamp 1 req.d
A–2 Rc 58–60

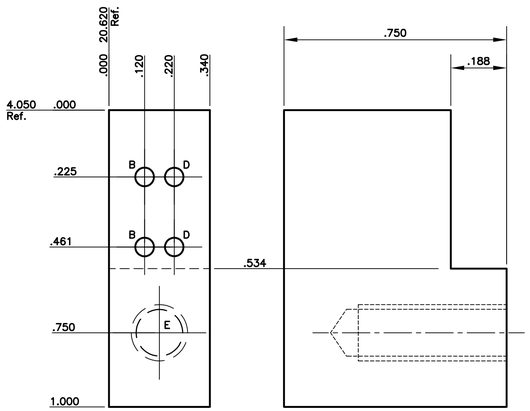

128 Punch Retainer 1 req.d
A–2 Rc 58–60

Hole Data
A = Drill & Tap Far Side For #8–32 Thread.
B = .0630"ø Hole Thru.
C = .0632"ø Hole Thru.
D = .0625"ø Hole Thru.
E = Drill & Tap Far Side For #10–32 Thread.
F = .0645"ø Hole Thru, Taper Relieve Far Side.
G = .0630"ø Pilot Hole.

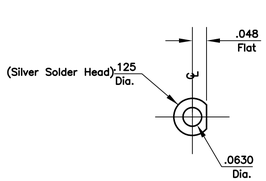

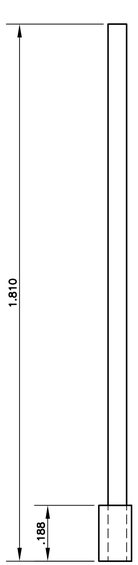

222 Punch 1 req.d
Carbide Rc –

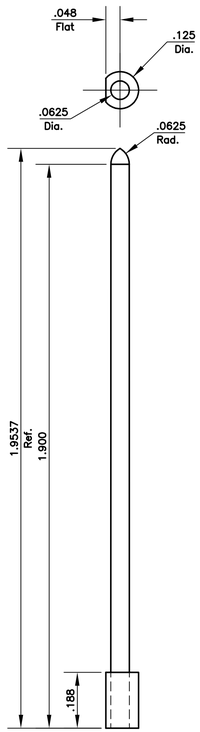

223 Solid Pilot 1 req.d
Carbide Rc –

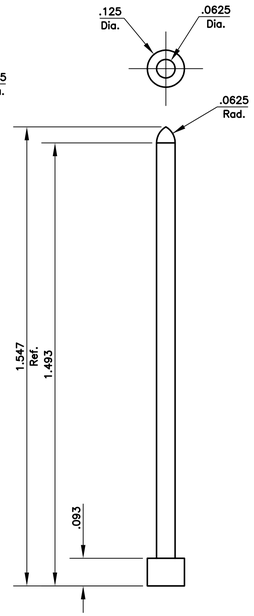

224 Spring Pilot 27 req.d
M–2 Rc 60–62

380 Spring Pilot 14 req.d
M–2 Rc 60–62

Advanced Designs, Inc.
Powers Lake, Wis.

CUST. **Your Customer**

CAD FILE:	CONTACT–32	DATE	SHT. NO. 32 of 43
DRAWN BY:	M. Dennis	05–17–08	
CHECKED:	M. Dennis	05–17–08	SCALE 4 = 1
APPROVED:	–	02–01–06	
PART NO.	87654321		TOOL NO. 05–500
PART NAME	Contact, Changeover		

www.diedesigner.com

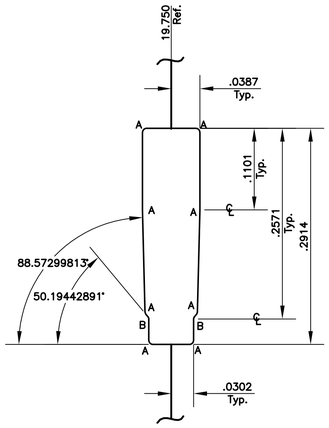

Enlarged 10 To 1

Radius Data
A = .0057 Radius.
B = .0043 Radius.

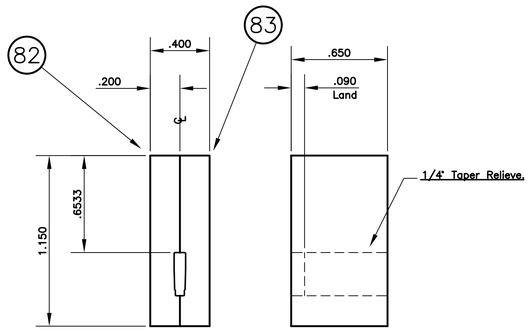

82 83 Die Insert 1 req.d each
Carbide, CD650 Rc –

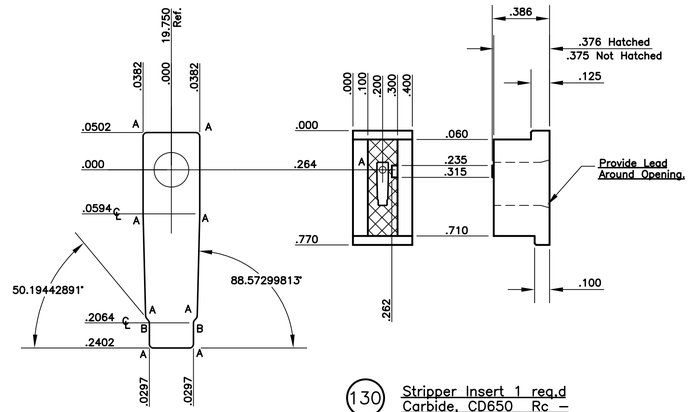

Enlarged 10 To 1

Radius Data
A = .0052 Radius.
B = .0048 Radius.

130 Stripper Insert 1 req.d
Carbide, CD650 Rc –

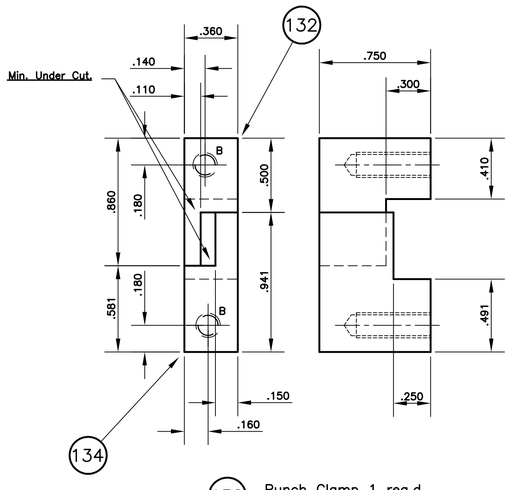

132 Punch Clamp 1 req.d
A-2 Rc 58-60

134 Punch Clamp 1 req.d
A-2 Rc 58-60

Hole Data
A = 3/64"ø Wire Start Hole.
B = Drill & Tap Far Side For #8-32 Thread.

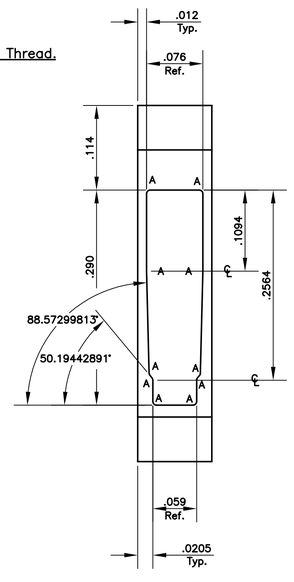

Enlarged 10 To 1

Radius Data
A = .005 Radius.

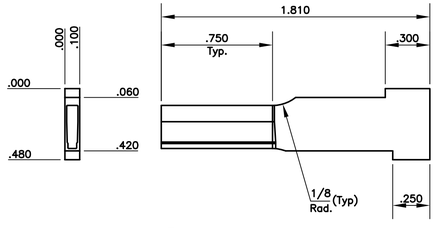

133 Punch 1 req.d
Carbide, CD337 Rc –

Advanced Designs, Inc. **Powers Lake, Wis.**			
CUST.	**Your Customer**		
CAD FILE:	CONTACT-33	DATE	SHT. NO. 33 of 43
DRAWN BY:	M. Dennis	05-17-08	
CHECKED:	M. Dennis	05-17-08	SCALE 1 = 1
APPROVED:	–	02-01-06	
PART NO.	87654321		TOOL NO. 05-500
PART NAME	Contact, Changeover		

www.diedesigner.com

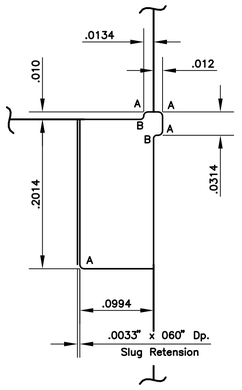

Enlarged 10 To 1

Radius Data
A = .0057 Radius.
B = .0043 Radius.

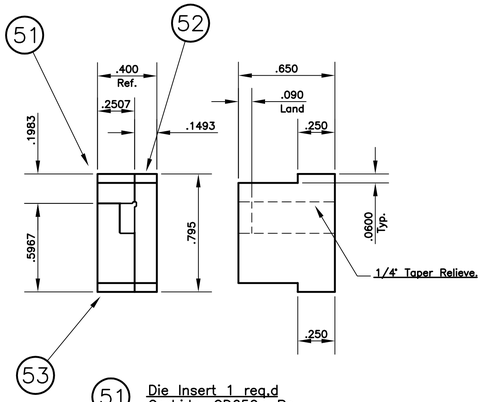

51 Die Insert 1 req.d
Carbide, CD650 Rc –

52 Die Insert 1 req.d
Carbide, CD650 Rc –

53 Die Insert 1 req.d
Carbide, CD650 Rc –

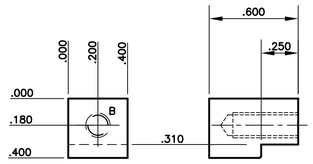

50 Die Clamp 1 req.d
A–2 Rc 58–60

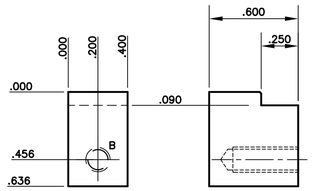

54 Die Clamp 1 req.d
A–2 Rc 58–60

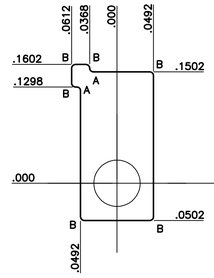

Enlarged 10 To 1

Radius Data
A = .0048 Radius.
B = .0052 Radius.

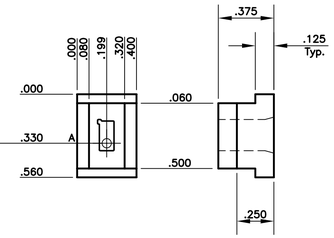

164 Stripper Insert 1 req.d
Carbide, CD650 Rc –

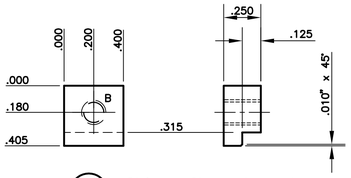

163 Stripper Clamp 1 req.d
A–2 Rc 58–60

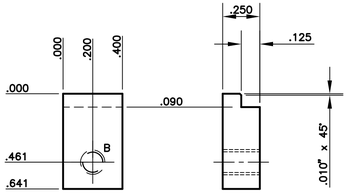

165 Stripper Clamp 1 req.d
A–2 Rc 58–60

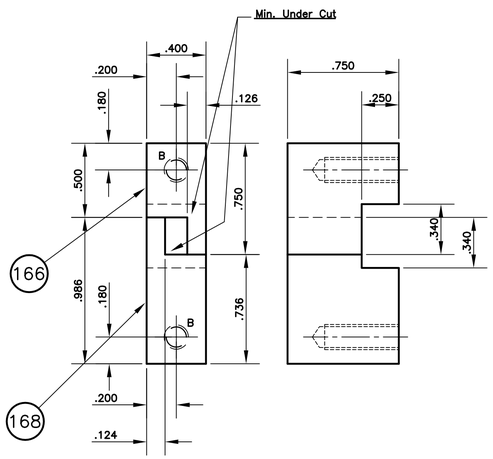

166 Punch Clamp 1 req.d
A–2 Rc 58–60

168 Punch Clamp 1 req.d
A–2 Rc 58–60

Hole Data
A = 1/16"ø Wire Start Hole.
B = Drill & Tap Far Side For #8–32 Thread.

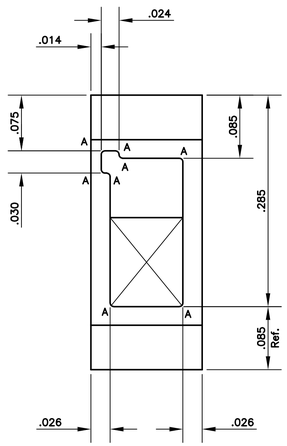

Enlarged 10 To 1

Radius Data
A = .005 Radius.

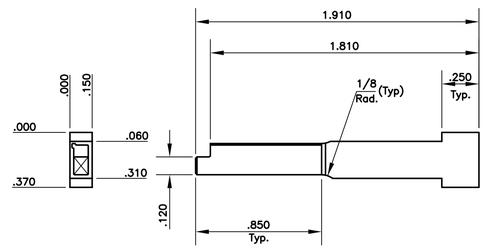

167 Punch 1 req.d
Carbide, CD337 Rc –

Advanced Designs, Inc. **Powers Lake, Wis.**			
CUST. **Your Customer**			
CAD FILE:	CONTACT–34	DATE	SHT. NO. 34 of 43
DRAWN BY:	M. Dennis	05–17–08	
CHECKED:	M. Dennis	05–17–08	SCALE 1 = 1
APPROVED:	–	02–01–06	
PART NO.	87654321		TOOL NO. 05–500
PART NAME	Contact, Changeover		

www.diedesigner.com

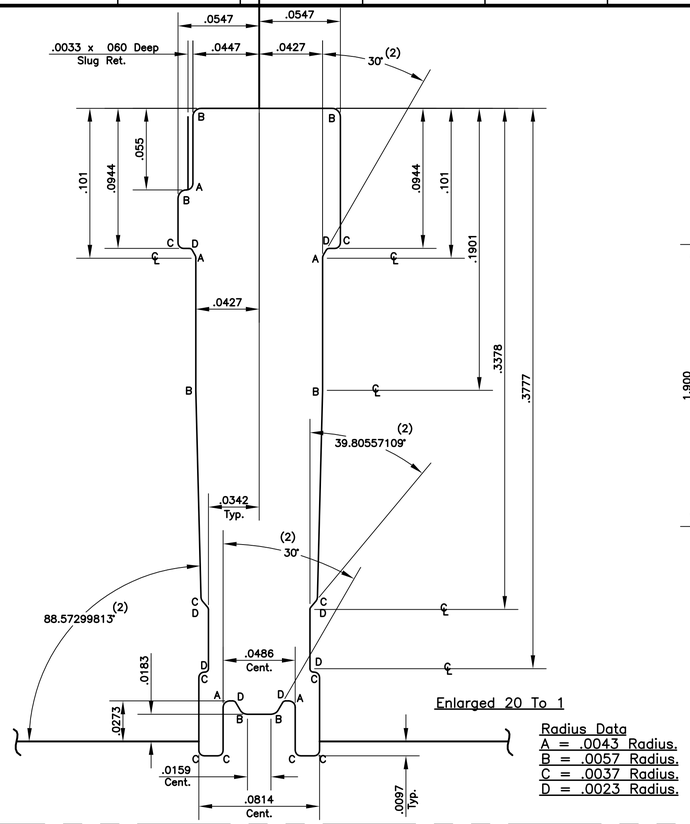

Radius Data
A = .0043 Radius.
B = .0057 Radius.
C = .0037 Radius.
D = .0023 Radius.

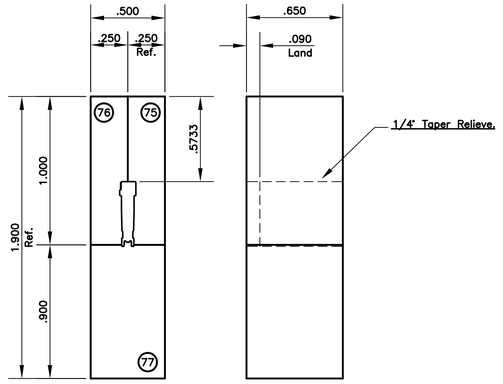

75 Die Insert 1 req.d
Carbide, CD650 Rc –

76 Die Insert 1 req.d
Carbide, CD650 Rc –

77 Die Insert 1 req.d
Carbide, CD650 Rc –

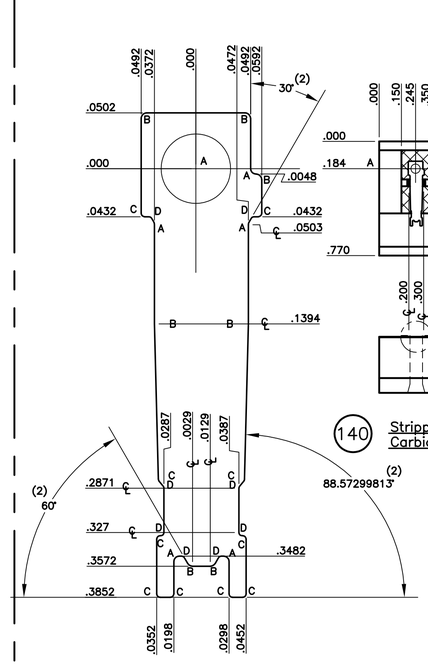

Radius Data
A = .0048 Radius.
B = .0052 Radius.
C = .0032 Radius.
D = .0028 Radius.

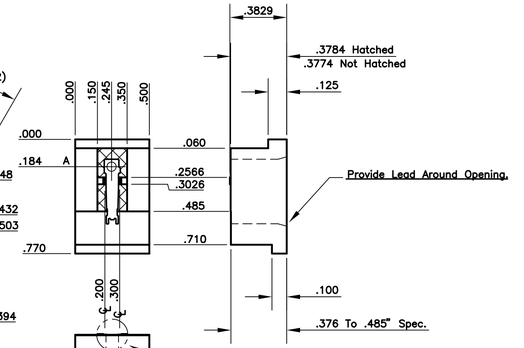

140 Stripper Insert 1 req.d
Carbide, CD650 Rc –

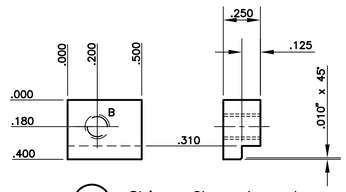

139 Stripper Clamp 1 req.d
A–2 Rc 58–60

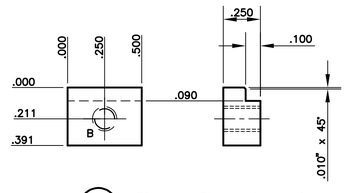

141 Stripper Clamp 1 req.d
A–2 Rc 58–60

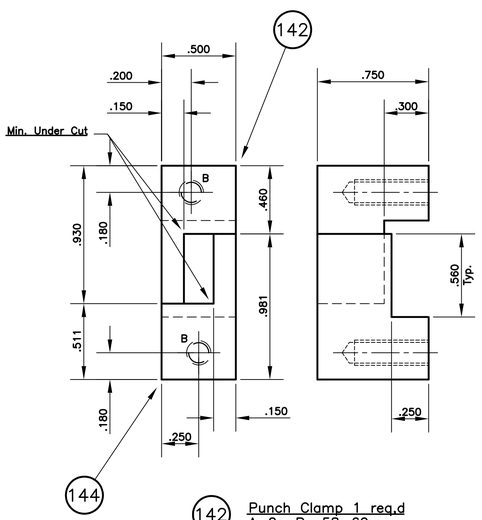

142 Punch Clamp 1 req.d
A–2 Rc 58–60

144 Punch Clamp 1 req.d
A–2 Rc 58–60

Hole Data
A = 1/16"ø Wire Start Hole.
B = Drill & Tap Far Side For #8–32 Thread.

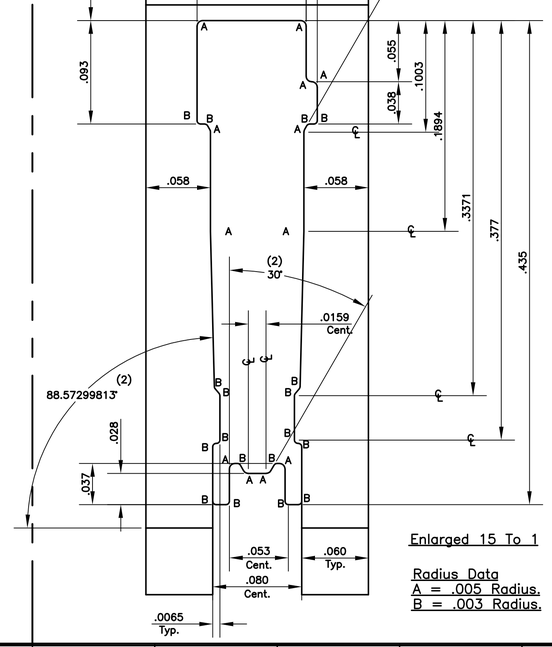

Radius Data
A = .005 Radius.
B = .003 Radius.

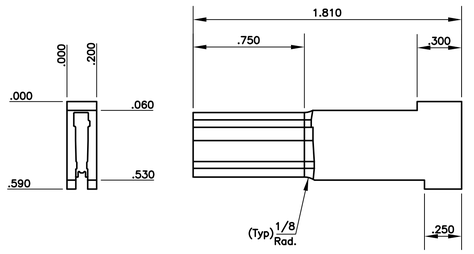

143 Punch 1 req.d
Carbide, CD337 Rc –

Advanced Designs, Inc. Powers Lake, Wis.			
CUST. Your Customer			
CAD FILE:	CONTACT–35	DATE	SHT. NO. 35 of 43
DRAWN BY:	M. Dennis	05–17–08	
CHECKED:	M. Dennis	05–17–08	SCALE 2 = 1
APPROVED:	–	02–01–06	
PART NO.	87654321		TOOL NO. 05–500
PART NAME	Contact, Changeover		

www.diedesigner.com

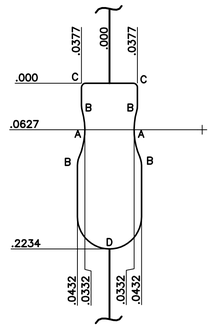

Enlarged 10 To 1

Radius Data
A = .0918 Radius.
B = .0287 Radius.
C = .0057 Radius.
D = .0432 Radius.

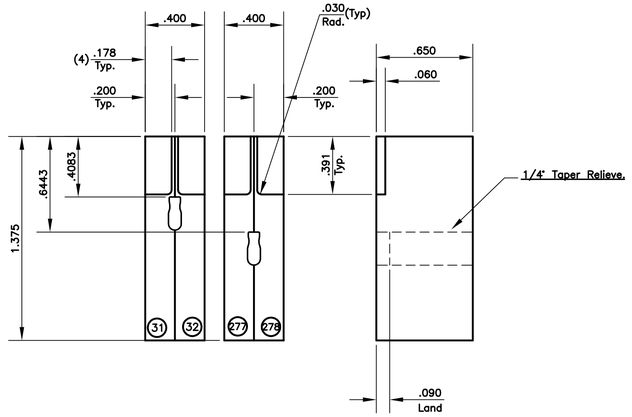

277 278 Die Insert 1 req.d each
Carbide, CD650 Rc –

31 32 Die Insert 1 req.d each
Carbide, CD650 Rc –

Hole Data
A = 1/16"ø Wire Start Hole.
B = Drill & Tap Far Side For #8–32 Thread.

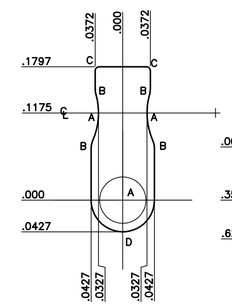

Enlarged 10 To 1

Radius Data
A = .0923 Radius.
B = .0282 Radius.
C = .0052 Radius.
D = .0427 Radius.

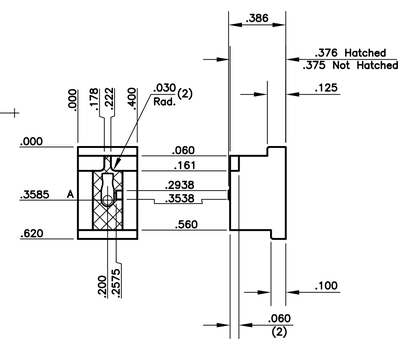

183 333 Stripper Insert 1 req.d each
Carbide, CD650 Rc –

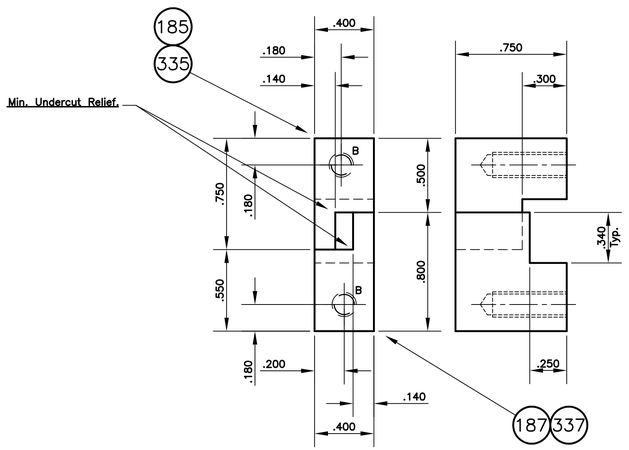

185 335 Punch Clamp 1 req.d each
A–2 Rc 58–60

187 337 Punch Clamp 1 req.d each
A–2 Rc 58–60

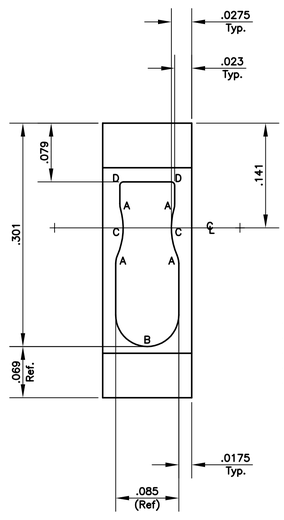

Enlarged 10 To 1

Radius Data
A = .028 Radius.
B = .0425 Radius.
C = .0925 Radius.
D = .005 Radius.

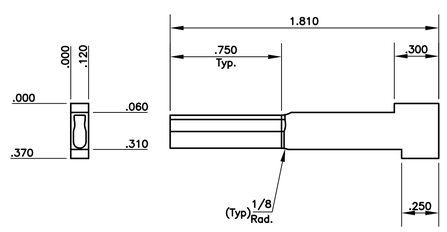

186 336 Punch 1 req.d each
Carbide, CD337 Rc –

Advanced Designs, Inc. **Powers Lake, Wis.**			
CUST.	**Your Customer**		
CAD FILE:	CONTACT–36	DATE	SHT. NO. 36 of 43
DRAWN BY:	M. Dennis	05–17–08	
CHECKED:	M. Dennis	05–17–08	SCALE 2 = 1
APPROVED:	–	02–01–06	
PART NO.	87654321		TOOL NO. 05–500
PART NAME	Contact, Changeover		

www.diedesigner.com

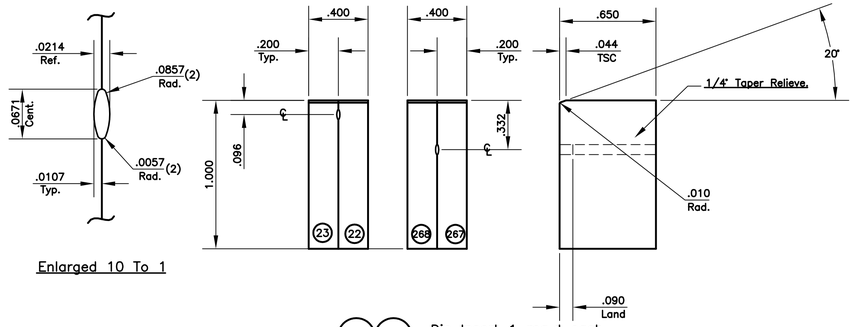

Enlarged 10 To 1

268 267 Die Insert 1 req.d each Carbide, CD650 Rc –

22 23 Die Insert 1 req.d each Carbide, CD650 Rc –

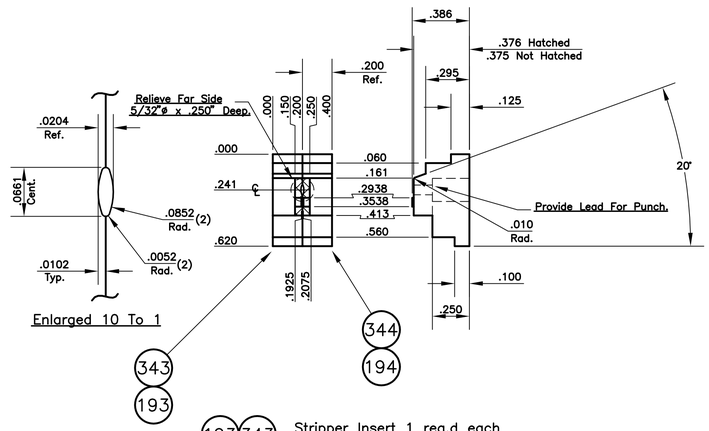

Enlarged 10 To 1

193 343 Stripper Insert 1 req.d each Carbide, CD650 Rc –

194 344 Stripper Insert 1 req.d each Carbide, CD650 Rc –

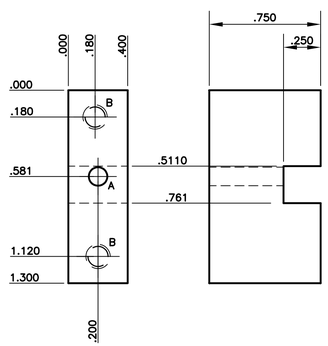

196 346 Punch Retainer 1 req.d each A–2 Rc 58–60

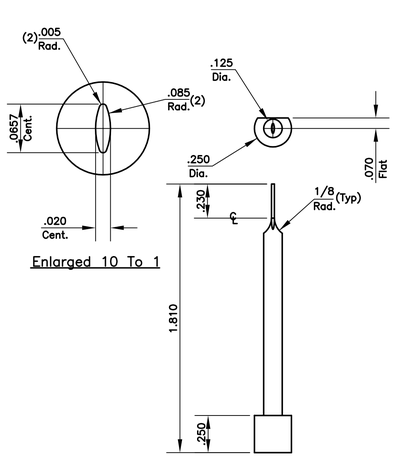

Enlarged 10 To 1

197 347 Punch 1 req.d each Carbide Rc –

Hole Data
A = .1250"ø Hole Thru.
B = Drill & Tap Far Side For #8–32 Thread.

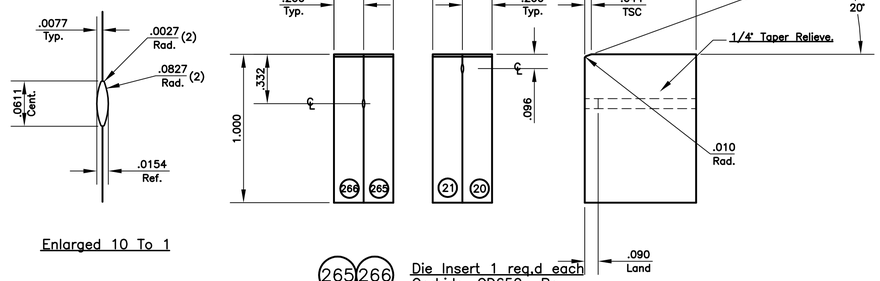

Enlarged 10 To 1

265 266 Die Insert 1 req.d each Carbide, CD650 Rc –

20 21 Die Insert 1 req.d each Carbide, CD650 Rc –

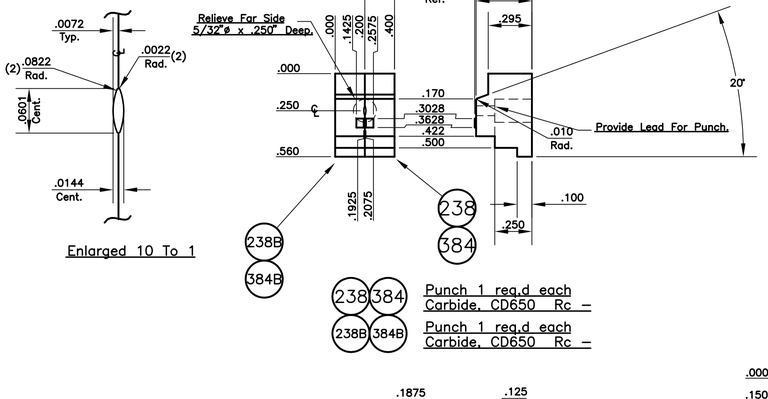

Enlarged 10 To 1

238 384 Punch 1 req.d each Carbide, CD650 Rc –

238B 384B Punch 1 req.d each Carbide, CD650 Rc –

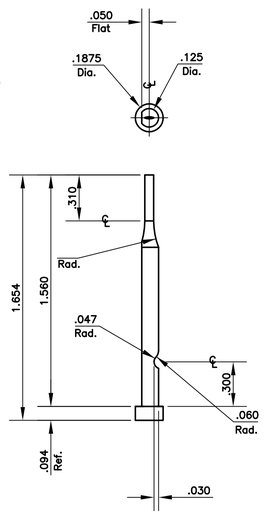

Enlarged 10 To 1

198 348 Eye Micro 1 req.d each M–2 Rc 60–62

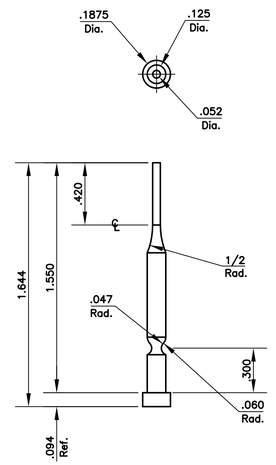

227 Micro Pilot 3 req.d M–2 Rc 60–62

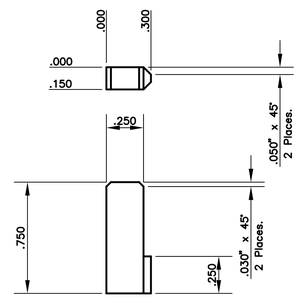

109 303 Lifter Pad 6 req.d each A–2 Rc 58–60

Advanced Designs, Inc.
Powers Lake, Wis.

CUST. **Your Customer**

CAD FILE:	CONTACT–37	DATE	SHT. NO. 37 of 43
DRAWN BY:	M. Dennis	05–17–08	
CHECKED:	M. Dennis	05–17–08	SCALE 2 = 1
APPROVED:	–	02–01–06	
PART NO.	87654321		TOOL NO. 05–500
PART NAME	Contact, Changeover		

www.diedesigner.com

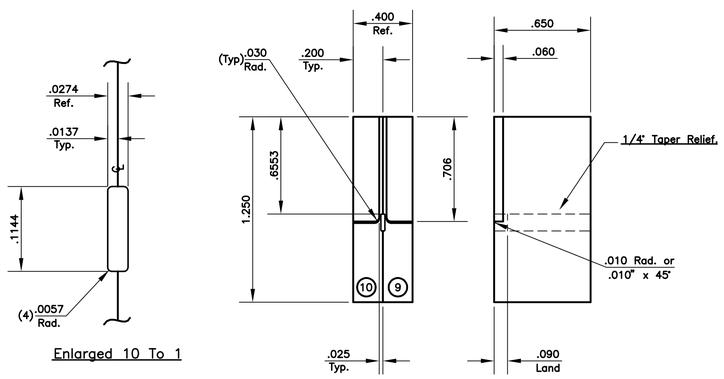

Enlarged 10 To 1

9 10 Die Insert 1 req.d each
Carbide, CD650 Rc –

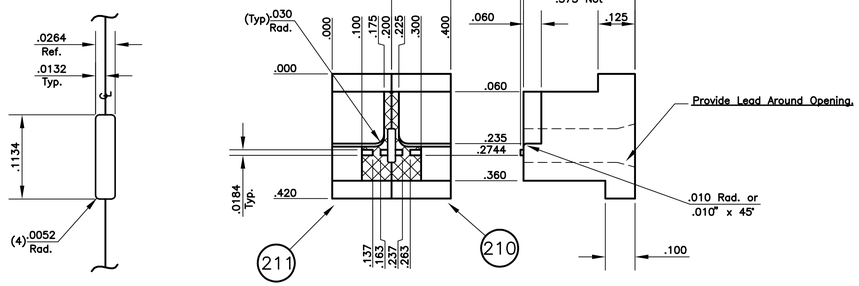

Enlarged 10 To 1

Enlarged 4 To 1 → 210 211 Stripper Insert 1 req.d each
Carbide, CD650 Rc –

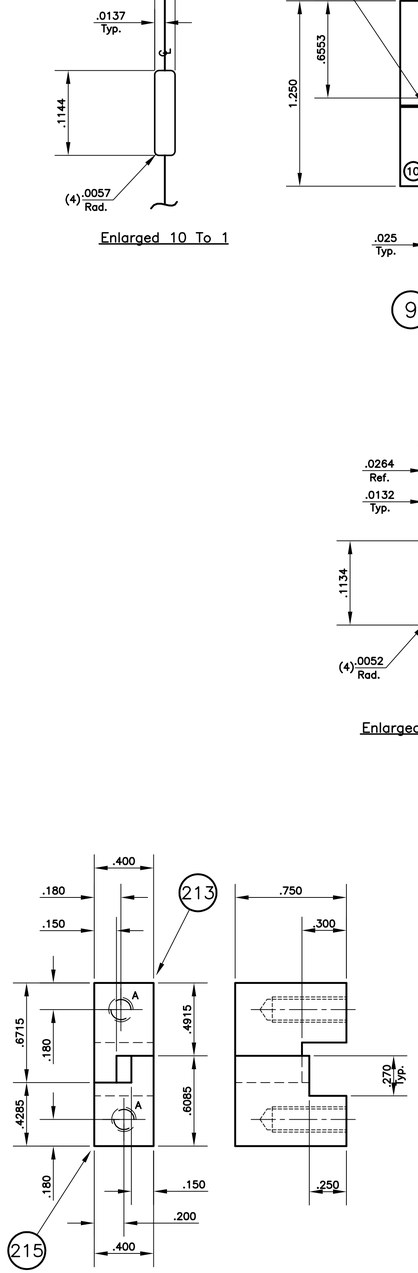

213 215 Punch Retainer 1 req.d each
A-2 Rc 58-60

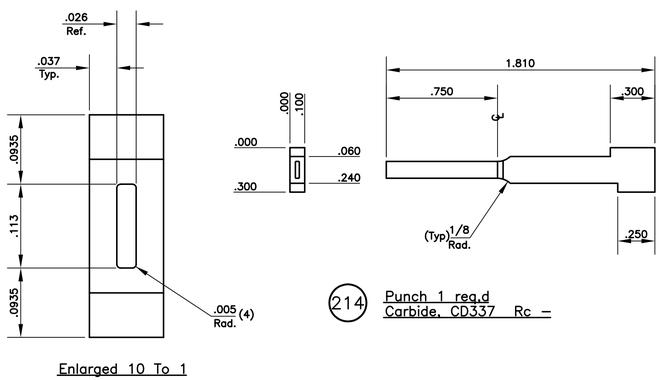

Enlarged 10 To 1

214 Punch 1 req.d
Carbide, CD337 Rc –

Hole Data
A = Drill & Tap Far Side For #8-32 Thread.

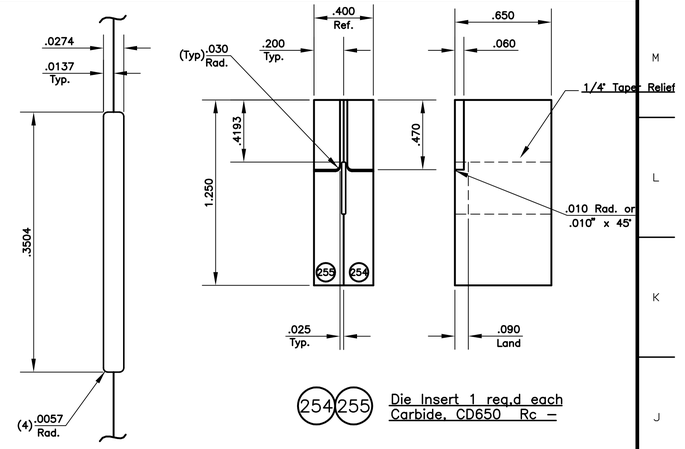

Enlarged 10 To 1

254 255 Die Insert 1 req.d each
Carbide, CD650 Rc –

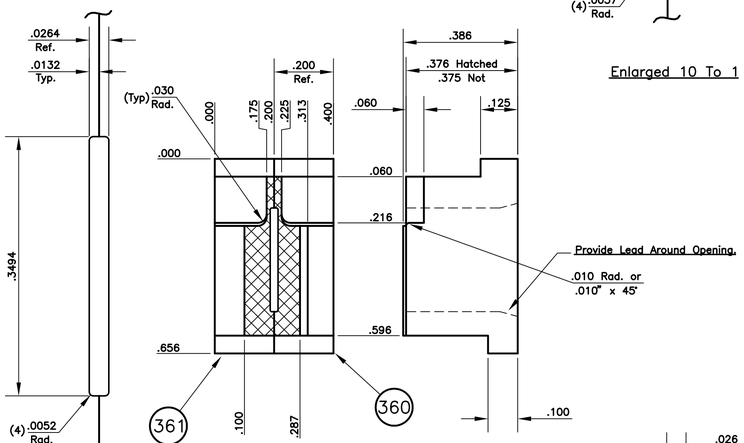

Enlarged 10 To 1

Enlarged 4 To 1 → 360 361 Stripper Insert 1 req.d each
Carbide, CD650 Rc –

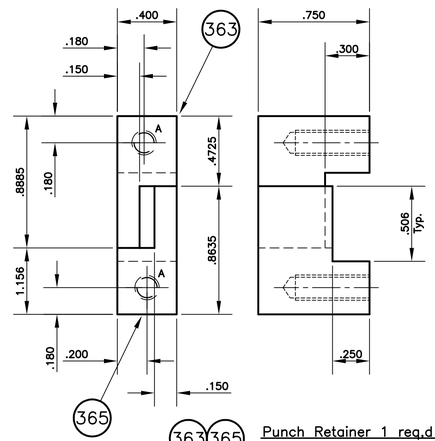

363 365 Punch Retainer 1 req.d each
A-2 Rc 58-60

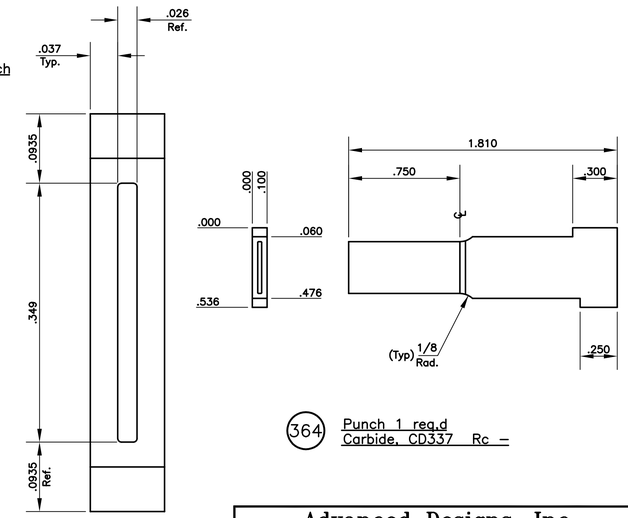

364 Punch 1 req.d
Carbide, CD337 Rc –

Advanced Designs, Inc.	
Powers Lake, Wis.	
CUST. **Your Customer**	
CAD FILE: CONTACT-38	DATE
DRAWN BY: M. Dennis	05-17-08
CHECKED: M. Dennis	05-17-08
APPROVED: –	02-01-06
PART NO. 87654321	
PART NAME Contact, Changeover	
SHT. NO. 38 of 43	
SCALE 2 = 1	
TOOL NO. 05-500	

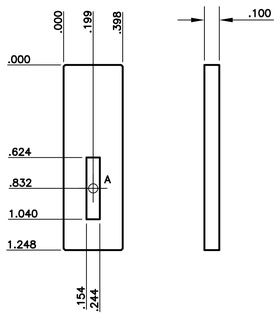

(11) Die Shim 1 req.d
A-2 Rc 58-60

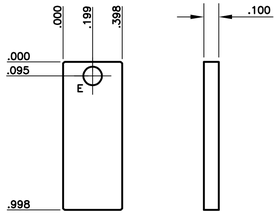

(24) Die Shim 1 req.d
A-2 Rc 58-60

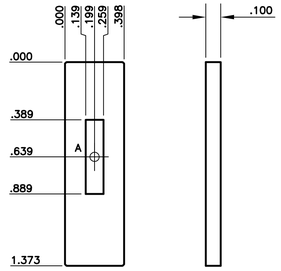

(33) Die Shim 1 req.d
A-2 Rc 58-60

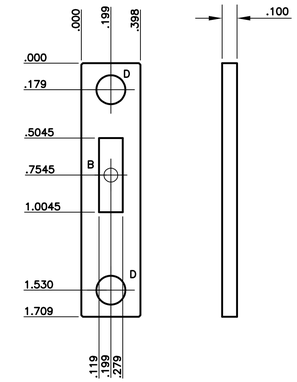

(55) Die Shim 1 req.d
A-2 Rc 58-60

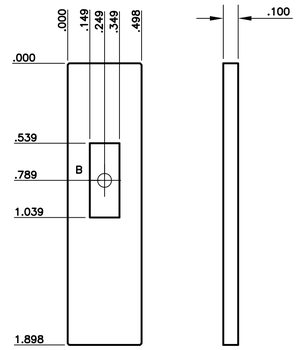

(78) Die Shim 1 req.d
A-2 Rc 58-60

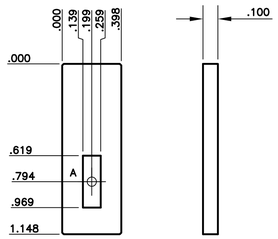

(84) Die Shim 1 req.d
A-2 Rc 58-60

Req'd In Initial Ass'y

Die Shim Set
1. .050" Thick
2. .100" Thick
3. .105" Thick
4. .110" Thick
5. .115" Thick
6. .120" Thick
7. .125" Thick
8. .130" Thick
9. .135" Thick
10. .140" Thick
11. .145" Thick
12. .150" Thick

Hole Data
A = 1/16"ø Wire Start Hole.
B = 3/32"ø Wire Start Hole.
C = 3/32"ø Drill Thru.
D = 3/16"ø Drill Thru.
E = 1/8"ø Drill Thru.

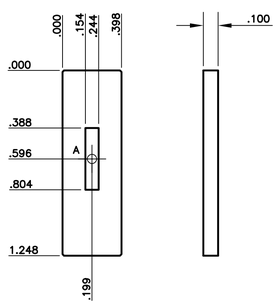

(256) Die Shim 1 req.d
A-2 Rc 58-60

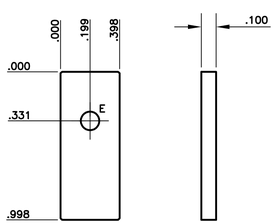

(269) Die Shim 1 req.d
A-2 Rc 58-60

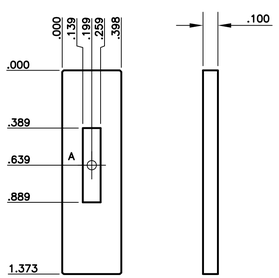

(279) Die Shim 1 req.d
A-2 Rc 58-60

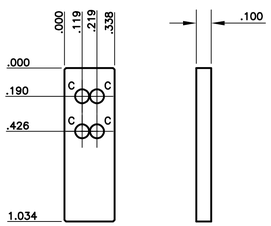

(87) Die Shim 1 req.d
A-2 Rc 58-60

Advanced Designs, Inc. Powers Lake, Wis.			
CUST.	Your Customer		
CAD FILE:	CONTACT-39	DATE	SHT. NO. 39 of 43
DRAWN BY:	M. Dennis	05-17-08	
CHECKED:	M. Dennis	05-17-08	SCALE 2 = 1
APPROVED:	-	02-01-06	
PART NO.	87654321		TOOL NO. 05-500
PART NAME	Contact, Changeover		

www.diedesigner.com

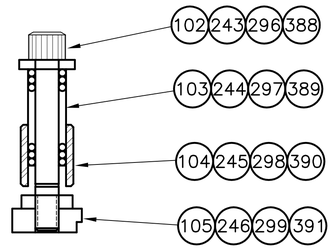

102 243 Locating Screw 6 req.d each Purchase Rc –

296 388 Locating Screw 4 req.d each Purchase Rc –

103 244 Ball Cage 6 req.d each Purchase Rc –

297 389 Ball Cage 4 req.d each Purchase Rc –

104 245 Guide Bushing 6 req.d each Purchase Rc –

298 390 Guide Bushing 4 req.d each Purchase Rc –

105 246 Screw Dowel Nut 6 req.d each Purchase Rc –

299 391 Screw Dowel Nut 4 req.d each Purchase Rc –

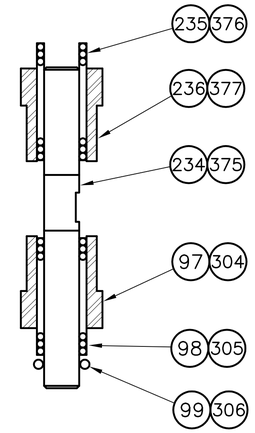

97 Bearing Cage 11 req.d Purchase Rc –

304 Bearing Cage 7 req.d Purchase Rc –

98 Guide Bushing 11 req.d Purchase Rc –

305 Guide Bushing 7 req.d Purchase Rc –

99 "O" Ring 11 req.d Purchase Rc –

306 "O" Ring 7 req.d Purchase Rc –

234 Subliner 11 req.d Purchase Rc –

375 Subliner 7 req.d Purchase Rc –

235 Bearing Cage 11 req.d Purchase Rc –

376 Bearing Cage 7 req.d Purchase Rc –

236 Guide Bushing 11 req.d Purchase Rc –

377 Guide Bushing 7 req.d Purchase Rc –

Notes:
1. All Components Molex Standard This Sheet.

Advanced Designs, Inc.
Powers Lake, Wis.

CUST. **Your Customer**

CAD FILE:	CONTACT-40	DATE	SHT. NO. 40 of 43
DRAWN BY:	M. Dennis	05-17-08	
CHECKED:	M. Dennis	05-17-08	SCALE 1 = 1
APPROVED:	–	02-01-06	
PART NO.	87654321		TOOL NO. 05-500
PART NAME	Contact, Changeover		

www.diedesigner.com

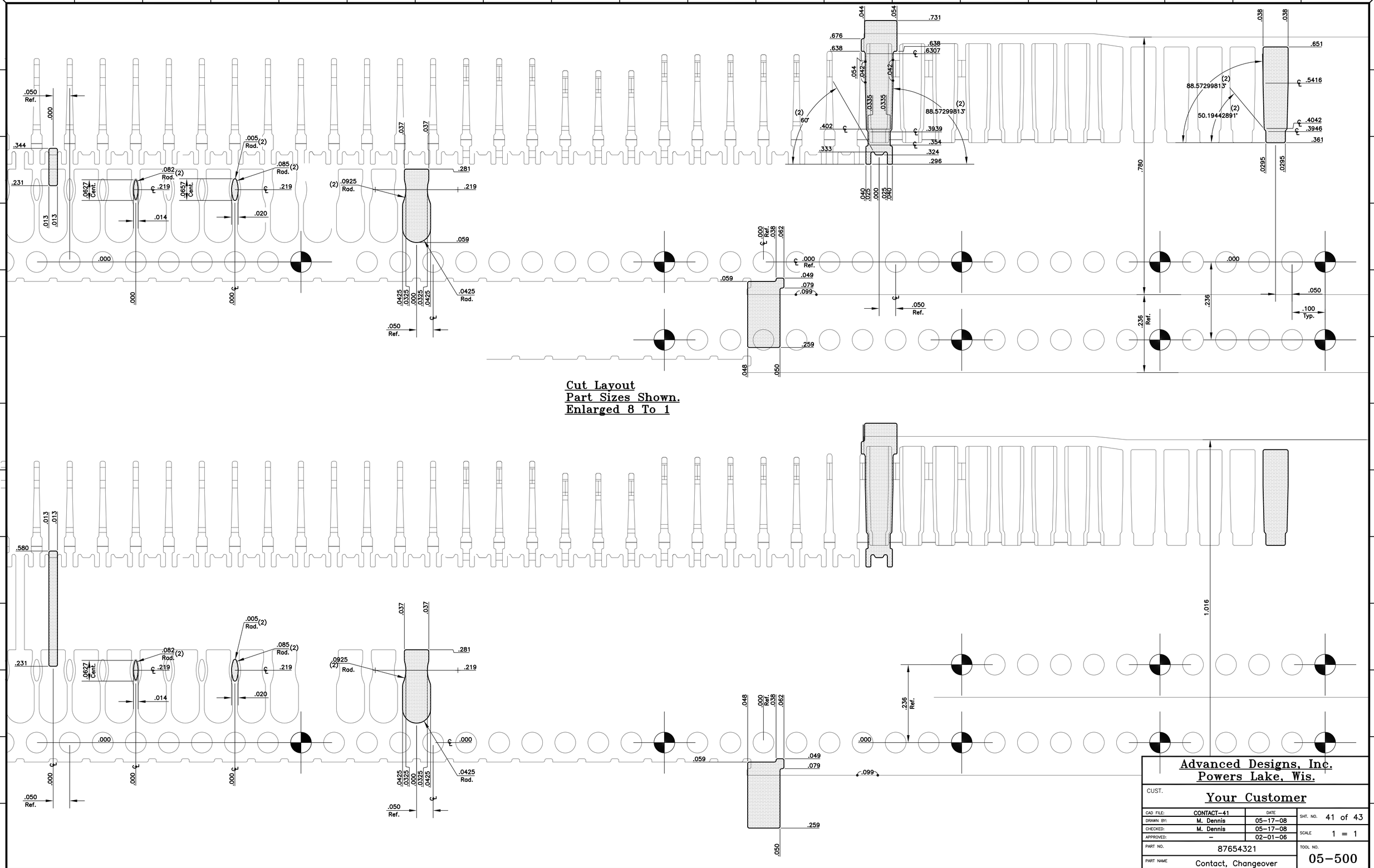

Advanced Designs, Inc. Powers Lake, Wis.	
CUST.	Your Customer
CAD FILE: CONTACT-41	DATE
DRAWN BY: M. Dennis	05-17-08
CHECKED: M. Dennis	05-17-08
APPROVED: –	02-01-06
SHT. NO. 41 of 43	
SCALE 1 = 1	
PART NO. 87654321	TOOL NO. 05-500
PART NAME Contact, Changeover	

www.diedesigner.com

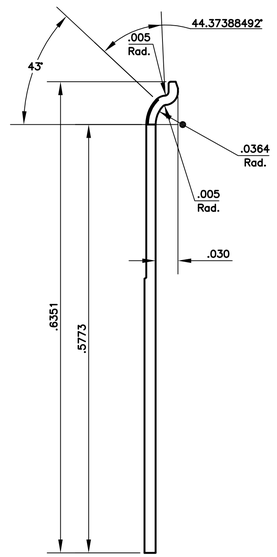

1st Form & Restrike
Enlarged 10 To 1

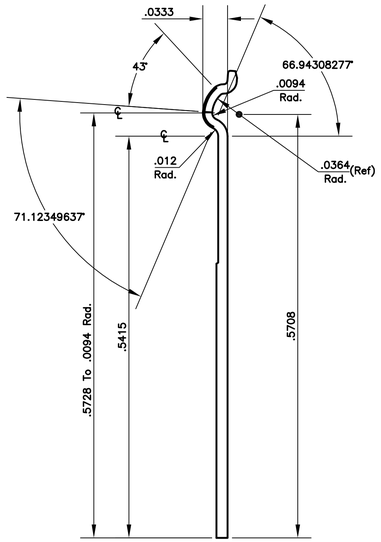

2nd Form & Restrike
Enlarged 10 To 1

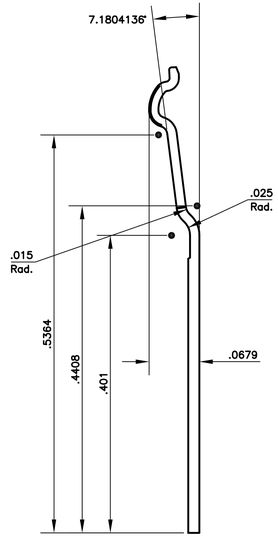

3rd Form & Restrike
Enlarged 10 To 1

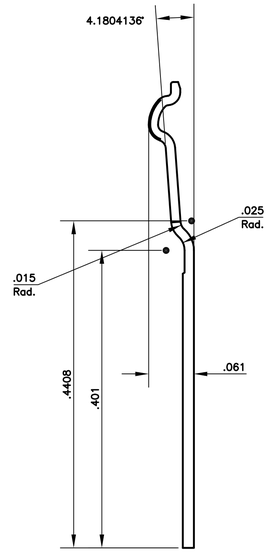

After Qualify To Size
Enlarged 10 To 1

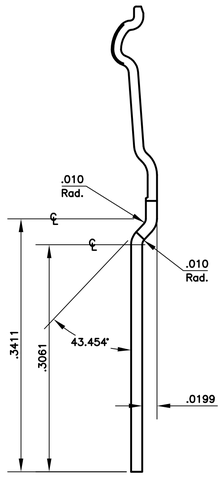

After 1st Offset
P/N 73828, Offset Down
Enlarged 10 To 1

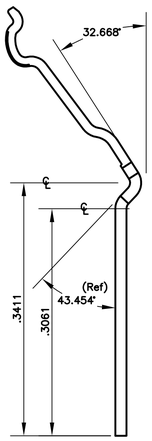

After Kick Up
P/N 73828, Offset Down
Enlarged 10 To 1

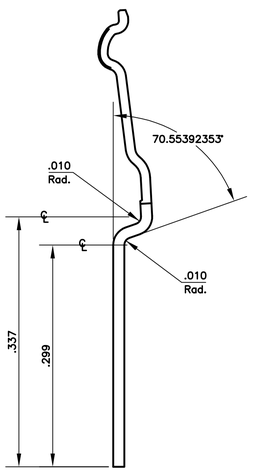

After Finish Offset
P/N 73828, Offset Down
Enlarged 10 To 1

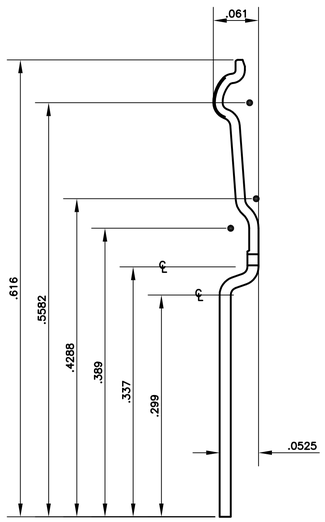

After Qualify Offset
P/N 73828, Offset Down
Enlarged 10 To 1

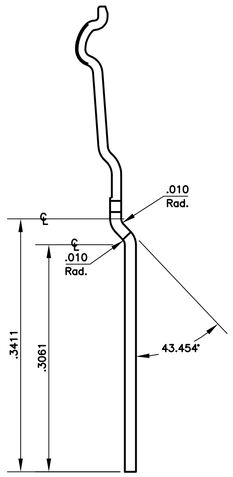

After 1st Offset
P/N 73827, Offset Up
Enlarged 10 To 1

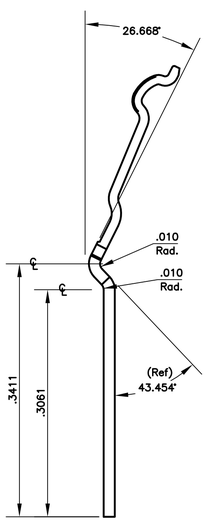

After Kick Down
P/N 73827, Offset Up
Enlarged 10 To 1

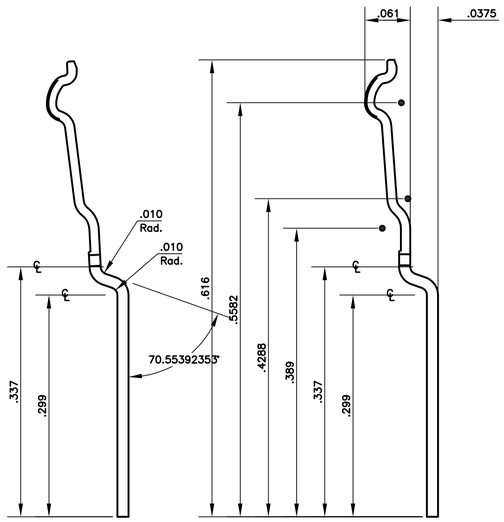

After Final Offset
P/N 73827, Offset Up
Enlarged 10 To 1

After Qualify Offset
P/N 73827, Offset Up
Enlarged 10 To 1

Notes:
1. Form Profile For .780" Wide Stock
Add .236" For 1.016" Wide Stock.

Advanced Designs, Inc. Powers Lake, Wis.			
CUST.	Your Customer		
CAD FILE:	CONTACT-42	DATE	SHT. NO. 42 of 43
DRAWN BY:	M. Dennis	05-17-08	
CHECKED:	M. Dennis	05-17-08	SCALE 1 = 1
APPROVED:	–	02-01-06	
PART NO.	87654321		TOOL NO. 05-500
PART NAME	Contact, Changeover		

www.diedesigner.com

392	5	CRS	1.000 x 1.000 x 1.600	–
391	4	Pur.	Dowel Nut, Cat.#SCRNUT	–
390	4	Pur.	Guide Bush, Cat.#BUSH1	–
389	4	Pur.	Ball Cage, Cat.#761.08.330	–
388	4	Pur.	Dowel Scr., M-8 Thread	–
387	1	A-2	.062 x .750 x 1.400	58-60
386	1	A-2	7/16"ø x .125" Lg.	58-60
385	1	A-2	.500 x .720 x 3.398	58-60
384B	1	CD650	.200 x .386 x .560	–
384	1	CD650	.200 x .386 x .560	–
383	1	A-2	.250 x .400 x .400	58-60
382	14	Pur.	#8-32 Set Screw	–
381	14	Pur.	5/32"ø Sprg. Len To Suit	–
380	14	M-2	VCB 06-175 M2 P=.0625	60-62
379	2	A-2	.250 x .875 x 1.250	58-60
378	1	A-2	.500 x .720 x 3.920	58-60
377	7	Pur.	Guide Bush. Cat.#BUSH2	–
376	7	Pur.	Ball Cage, Cat.#763.12.400	–
375	7	Pur.	Subliner, Cat.#GDPIN2	–
374	10	S-7	.688"ø x .190" Lg.	48-50
373	10	Pur.	1"øSprg. Cat.#9-1605-36	1.25 Lg
372	10	CRS	.940"ø x 1.749" Lg.	–
371	1	A-2	.750 x 8.000 x 8.280	58-60
370	1	A-2	.750 x 6.000 x 8.280	58-60
369	1	A-2	.875 x 6.000 x 8.280	58-60
368	1	A-2	.375 x 2.500 x 8.280	58-60
367	1	A-2	.250 x .400 x .400	58-60
366	1	CD650	.375 x .400 x .420	–
365	1	A-2	.400 x .750 x .8635	58-60
364	1	CD337	.100 x .536 x 1.810	–
363	1	A-2	.400 x .750 x .8885	58-60
362	1	A-2	.250 x .400 x .400	58-60
361	1	CD650	.200 x .386 x .656	–
360	1	CD650	.200 x .386 x .656	–
359	1	A-2	.250 x .400 x .400	58-60
358	1	CD650	.360 x .400 x 1.741	–
357	1	A-2	.400 x .500 x .750	58-60
356	1	A-2	.400 x .750 x .970	58-60
355	1	CD650	.200 x .360 x 1.670	–
354	1	CD650	.200 x .360 x 1.670	–
353	1	A-2	.250 x .400 x .400	58-60
352	1	CD650	.376 x .400 x .620	–
351	1	A-2	.250 x .400 x .400	58-60
350	2	Pur.	5/16-24 Unified Scr. Plug	–
349	2	Pur.	1/4"ø Sprg. Len To Suit	–
348	1	M-2	.1875"ø x 1.654" Lg.	60-62
347	1	Carb.	.250"ø x 1.810" Lg.	–
346	1	A-2	.400 x .750 x 1.300	58-60
345	1	A-2	.250 x .400 x .400	58-60
344	1	CD650	.200 x .386 x .620	–
343	1	CD650	.200 x .386 x .620	–
342	1	A-2	.250 x .400 x .400	58-60
341	1	A-2	.400 x .500 x .750	58-60
340	1	CD650	.400 x .420 x 1.747	–
339	1	A-2	.400 x .500 x .750	58-60
338	1	CD650	.400 x .420 x 1.735	–
337	1	A-2	.400 x .750 x .800	58-60
336	1	CD337	.120 x .370 x 1.810	–
335	1	A-2	.400 x .750 x .750	58-60
334	1	A-2	.250 x .400 x .400	58-60
333	1	CD650	.386 x .400 x .620	–
332	1	A-2	.250 x .400 x .400	58-60
331	1	A-2	.250 x .400 x .400	58-60
330	1	CD650	.310 x .375 x .400	–
329	1	CD650	.400 x .610 x 1.7999	–
328	1	A-2	.062 x .680 x 1.000	58-60
327	1	A-2	.250 x .400 x .400	58-60
326	1	CD650	.375 x .400 x .740	–
325	1	A-2	.250 x .400 x .400	58-60
324	1	A-2	.250 x .400 x .400	58-60
323	1	CD650	.310 x .375 x .400	–
322	1	CD650	.400 x .420 x 1.730	–
321	1	A-2	.400 x .500 x .750	58-60
320	1	A-2	.250 x .400 x .400	58-60
319	1	CD650	.375 x .400 x .740	–
318	1	A-2	.250 x .400 x .400	58-60
317	1	A-2	.750 x 4.980 x 8.000	58-60
316	1	A-2	.750 x 4.980 x 6.000	58-60
315	1	A-2	.875 x 4.980 x 6.000	58-60
314	1	A-2	.375 x 2.500 x 4.980	58-60

313	2	A-2	.250"ø x .486" Lg.	58-60
312	1	A-2	.312 x 1.014 x 2.750	58-60
311	1	A-2	.400 x .625 x 2.889	58-60
310	1	A-2	.125 x .989 x 8.050	58-60
309	3	Pur.	1/4"ø Sprg. Len To Suit	–
308	3	M-2	.206"ø x .394" Lg.	60-62
307	1	A-2	.125 x .739 x 4.500	58-60
306	7	Pur.	"O" Ring, Cat.#112-B46A	–
305	7	Pur.	Guide Bush. Cat.#BUSH2	–
304	7	Pur.	Ball Cage Cat.#763.12.400	–
303	6	A-2	.150 x .300 x .750	58-60
302	16	Pur.	5/16-24 Unified Scr. Plug	–
301	13	Pur.	1/4"ø Sprg. Len To Suit	–
300	13	M-2	.230"ø x .210" Lg.	60-62
299	4	Pur.	Dowel Nut, Cat.#SCRNUT	–
298	4	Pur.	Guide Bush, Cat.#BUSH1	–
297	4	Pur.	Ball Cage, Cat.#761.08.330	–
296	4	Pur.	Dowel Scr., M-8 Thread	–
295	1	A-2	.700"ø x .250" Lg.	58-60
294	1	A-2	.125 x .739 x 8.300	58-60
293	1	A-2	.750 x 5.000 x 8.000	58-60
292	1	A-2	.750 x 5.000 x 6.000	58-60
291	1	A-2	.300 x .370 x .750	58-60
290	1	CD650	.400 x .560 x .7706	–
289	1	A-2	.400 x .500 x .625	58-60
288	1	A-2	.300 x .370 x .750	58-60
287	1	CD650	.400 x .560 x .7699	–
286	1	A-2	.400 x .500 x .625	58-60
285	1	A-2	.300 x .370 x .750	58-60
284	1	CD650	.400 x .560 x .7875	–
283	1	A-2	.400 x .500 x .625	58-60
282	1	A-2	.300 x .370 x .750	58-60
281	1	CD650	.400 x .560 x .7875	–
280	1	A-2	.400 x .500 x .625	58-60
279	1	A-2	.100 x .398 x 1.373	58-60
278	1	CD650	.200 x .650 x 1.375	–
277	1	CD650	.200 x .650 x 1.375	–
276	1	A-2	.400 x .500 x .625	58-60
275	1	M-2	.1998 x .2517 x .750	60-62
274	1	M-2	.0638 x .1472 x .750	60-62
273	1	CD650	.400 x .460 x .762	–
272	1	A-2	.400 x .500 x .625	58-60
271	1	CD650	.400 x .470 x .750	–
270	–	–	Omit	–
269	1	A-2	.100 x .398 x .998	58-60
268	1	CD650	.200 x .650 x 1.000	–
267	1	CD650	.200 x .650 x 1.000	–
266	1	CD650	.200 x .750 x 1.000	–
265	1	CD650	.200 x .750 x 1.000	–
264	1	A-2	.149 x .399 x .750	58-60
263	1	CD650	.050 x .200 x .750	–
262	1	CD650	.200 x .605 x .750	–
261	1	CD650	.200 x .605 x .750	–
260	1	A-2	.400 x .500 x .625	58-60
259	1	A-2	.149 x .399 x .750	58-60
258	1	CD650	.400 x .605 x .756	–
257	1	A-2	.400 x .500 x .625	58-60
256	1	A-2	.100 x .398 x 1.248	58-60
255	1	CD650	.200 x .650 x 1.250	–
254	1	CD650	.200 x .650 x 1.250	–
253	1	A-2	.375"ø x .861" Lg.	58-60
252	1	Pur.	1/2-20 Unified Scr. Plug.	–
251	1	Pur.	3/8"ø Sprg. Cat#9-0604-26	1.0Lg
250	1	CD650	.300 x .756 x 1.750	–
249	1	A-2	.125 x .839 x 8.300	58-60
248	1	A-2	.750 x 8.000 x 8.300	58-60
247	1	A-2	.750 x 6.000 x 8.300	58-60
246	6	Pur.	Dowel Nut, Cat.#SCRNUT	–
245	6	Pur.	Guide Bush, Cat.#BUSH1	–
244	6	Pur.	Ball Cage, Cat.#761.08.330	–
243	6	Pur.	Dowel Scr., M-8 Thread	–
242	4	A-2	.500 x 2.000 x 2.000	58-60
241	1	A-2	.062 x .750 x 1.500	58-60
240	1	A-2	7/16"ø x .125" Lg.	58-60
239	1	A-2	.500 x .720 x 3.634	58-60
238B	1	CD650	.200 x .386 x .560	–
238	1	CD650	.200 x .386 x .560	–

237	1	A-2	.250 x .400 x .400	58-60
236	11	Pur.	Guide Bush. Cat.#BUSH2	–
235	11	Pur.	Ball Cage, Cat.#763.12.400	–
234	11	Pur.	Subliner, Cat.#GDPIN2	–
233	16	S-7	.688"ø x .190" Lg.	48-50
232	16	Pur.	1"øSprg. Cat.#9-1605-36	1.25 Lg
231	16	CRS	.940"ø x 1.749" Lg.	–
230	3	A-2	.250 x .875 x 1.250	58-60
229	2	A-2	.500 x .720 x 3.920	58-60
228	3	Pur.	1/4"ø Sprg. Len To Suit	–
227	3	M-2	.1875"ø x 1.644" Lg.	60-62
226	27	Pur.	#8-32 Set Screw	–
225	27	Pur.	5/32"ø Sprg. Len To Suit	–
224	27	M-2	VCB 06-175 M2 P=.0625	60-62
223	1	Carb.	1PQ 2"Lg x P.0625	–
222	1	Carb.	1PQ 2"Lg. x P=.0630"	–
221	1	A-2	.750 x 8.000 x 8.280	58-60
220	1	A-2	.750 x 6.000 x 8.280	58-60
219	1	A-2	.875 x 6.000 x 8.280	58-60
218	1	A-2	.375 x 2.500 x 8.280	58-60
217	1	A-2	.250 x .400 x .400	58-60
216	1	CD650	.375 x .400 x .420	–
215	1	A-2	.400 x .6085 x .750	58-60
214	1	CD337	.100 x .300 x 1.810	–
213	1	A-2	.400 x .6715 x .750	58-60
212	1	A-2	.250 x .400 x .400	58-60
211	1	CD650	.200 x .386 x .420	–
210	1	CD650	.200 x .386 x .420	–
209	1	A-2	.250 x .400 x .400	58-60
208	1	CD650	.360 x .400 x 1.741	–
207	1	A-2	.400 x .500 x .750	58-60
206	1	A-2	.400 x .750 x .970	58-60
205	1	CD650	.200 x .360 x 1.670	–
204	1	CD650	.200 x .360 x 1.670	–
203	1	A-2	.250 x .400 x .400	58-60
202	1	CD650	.376 x .400 x .620	–
201	1	A-2	.250 x .400 x .400	58-60
200	2	Pur.	5/16-24 Unified Scr. Plug	–
199	2	Pur.	1/4"ø Sprg. Len To Suit	–
198	1	M-2	.1875"ø x 1.654" Lg.	60-62
197	1	Carb.	.250"ø x 1.810" Lg.	–
196	1	A-2	.400 x .750 x 1.300	58-60
195	1	A-2	.250 x .400 x .400	58-60
194	1	CD650	.200 x .386 x .620	–
193	1	CD650	.200 x .386 x .620	–
192	1	A-2	.250 x .400 x .400	58-60
191	1	A-2	.400 x .500 x .750	58-60
190	1	CD650	.400 x .420 x 1.747	–
189	1	A-2	.400 x .500 x .750	58-60
188	1	CD650	.400 x .420 x 1.735	–
187	1	A-2	.400 x .750 x .800	58-60
186	1	CD337	.120 x .370 x 1.810	–
185	1	A-2	.400 x .750 x .750	58-60
184	1	A-2	.250 x .400 x .400	58-60
183	1	CD650	.386 x .400 x .620	–
182	1	A-2	.250 x .400 x .400	58-60
181	1	CD650	.400 x .610 x 1.8749	–
180	1	A-2	.062 x .680 x 1.000	58-60
179	1	CD650	.400 x .470 x 1.7725	–
178	1	A-2	.400 x .500 x .750	58-60
177	1	A-2	.250 x .400 x .400	58-60
176	1	CD650	.3949 x .400 x .740	–
175	1	A-2	.250 x .400 x .400	58-60
174	1	CD650	.400 x .470 x 1.7556	–
173	1	A-2	.400 x .500 x .750	58-60
172	1	A-2	.750 x 4.980 x 8.000	58-60
171	1	A-2	.750 x 4.980 x 6.000	58-60
170	1	A-2	.875 x 4.980 x 6.000	58-60
169	1	A-2	.375 x 2.500 x 4.980	58-60
168	1	A-2	.400 x .750 x .986	58-60
167	1	CD337	.150 x .370 x 1.910	–
166	1	A-2	.400 x .750 x .750	58-60
165	1	A-2	.250 x .400 x .641	58-60
164	1	CD650	.375 x .400 x .560	–
163	1	A-2	.250 x .400 x .405	58-60
162	1	A-2	.062 x .680 x 1.000	58-60
161	1	A-2	.240 x .500 x .500	58-60
160	1	CD650	.360 x .3774 x .500	–
159	1	CD650	.400 x .750 x 1.8137	–
158	1	CD650	.250 x .460 x 1.7374	–
157	1	A-2	.400 x .500 x .750	58-60
156	1	CD650	.250 x .3774 x .610	–
155	1	A-2	.350 x .400 x .500	58-60

154	1	CD650	.250 x .360 x 1.752	–
153	1	A-2	.400 x .500 x .750	58-60
152	1	CD650	.250 x .3774 x .610	–
151	1	A-2	.350 x .400 x .500	58-60
150	1	CD650	.200 x .360 x 1.7674	–
149	1	CD650	.200 x .360 x 1.7693	–
148	1	A-2	.400 x .500 x .750	58-60
147	1	CD650	.200 x .460 x 1.7374	–
146	1	CD650	.200 x .460 x 1.735	–
145	1	A-2	.400 x .500 x .750	58-60
144	1	A-2	.500 x .750 x .981	58-60
143	1	CD337	.200 x .590 x 1.810	–
142	1	A-2	.500 x .750 x .930	58-60
141	1	A-2	.250 x .391 x .500	58-60
140	1	CD650	.1892 x .500 x .770	–
139	1	A-2	.250 x .400 x .500	58-60
138	1	CD650	.200 x .420 x 1.742	–
137	1	CD650	.200 x .420 x 1.738	–
136	1	CD650	.200 x .420 x 1.738	–
135	1	A-2	.500 x .600 x .750	58-60
134	1	A-2	.360 x .750 x .941	58-60
133	1	CD337	.100 x .480 x 1.810	–
132	1	A-2	.360 x .750 x .860	58-60
131	1	A-2	.250 x .391 x .400	58-60
130	1	CD650	.386 x .400 x .770	–
129	1	A-2	.250 x .400 x .400	58-60
128	1	A-2	.340 x .750 x 1.000	58-60
127	1	A-2	.250 x .340 x .400	58-60
126	1	CD650	.340 x .375 x .800	–
125	1	A-2	.250 x .340 x .400	58-60
124	1	A-2	.750 x 8.000 x 8.200	58-60
123	1	A-2	.750 x 6.000 x 8.200	58-60
122	1	A-2	.875 x 6.000 x 8.200	58-60
121	1	A-2	.3774 x 3.000 x 8.200	58-60
120	1	Pur.	Die Set (See Data)	–
119	1	Nylon	.50 x .50 x 1.00	–
118	–	–	Omit	–
117	2	Pur.	1/4"ø Sprg. Len To Suit	–
116	1	A-2	.312 x 1.250 x 2.750	58-60
115	1	Pur.	5/16"ø Sprg. Len To Suit	–
114	1	A-2	.400 x .625 x 3.125	58-60
113	1	A-2	.125 x 1.225 x 8.050	58-60
112	6	Pur.	1/4"ø Sprg. Len To Suit	–
111	6	M-2	.206"ø x .394" Lg.	60-62
110	1	A-2	.125 x .975 x 4.500	58-60
109	6	A-2	.150 x .300 x .750	58-60
108	25	Pur.	5/16-24 Unified Scr. Plug	–
107	19	Pur.	1/4"ø Sprg. Len To Suit	–
106	19	M-2	.230"ø x .210" Lg.	60-62
105	6	Pur.	Dowel Nut, Cat.#SCRNUT	–
104	6	Pur.	Guide Bush, Cat.#BUSH1	–
103	6	Pur.	Ball Cage, Cat.#761.08.330	–
102	6	Pur.	Dowel Scr., M-8 Thread	–
101	4	A-2	1.500"ø x 3.500" Lg.	58-60
100	1	A-2	.700"ø x .250" Lg.	58-60
99	11	Pur.	"O" Ring, Cat.#112-B46A	–
98	11	Pur.	Guide Bush. Cat.#BUSH2	–
97	11	Pur.	Ball Cage Cat.#763.12.400	–
96	1	A-2	.125 x .975 x 8.300	58-60
95	4	CD650	.188"ø x .090" Lg.	–
94	6	A-2	.250"ø x .250" Lg.	58-60
93	4	A-2	.350 x .400 x 1.600	58-60
92	1	A-2	.312 x 2.750 x 3.281	58-60
91	1	A-2	.312 x 1.250 x 2.750	58-60
90	1	A-2	1.188 x 2.750 x 5.750	58-60
89	1	A-2	.125 x 1.250 x 4.500	58-60
88	–	–	Omit	–
87	1	A-2	.100 x .338 x 1.034	58-60
86	1	A-2	.296 x .340 x .650	58-60
85	1	CD650	.340 x .650 x .800	–
84	1	A-2	.100 x .398 x 1.148	58-60
83	1	CD650	.200 x .650 x 1.150	–
82	1	CD650	.200 x .650 x 1.150	–
81	1	A-2	.149 x .750 x .799	58-60
80	1	CD650	.710 x .750 x .800	–
79	1	A-2	.500 x .625 x .800	58-60
78	1	A-2	.100 x .498 x 1.898	58-60
77	1	CD650	.500 x .650 x .900	–
76	1	CD650	.250 x .650 x 1.000	–
75	1	CD650	.250 x .650 x 1.000	–
74	1	A-2	.149 x .399 x .750	58-60
73	1	CD650	.200 x .710 x .758	–
72	1	CD650	.200 x .710 x .758	–

71	1	A-2	.400 x .500 x .625	58-60
70	1	A-2	.149 x .399 x .750	58-60
69	1	CD650	.200 x .710 x .750	–
68	1	CD650	.200 x .710 x .750	–
67	1	A-2	.400 x .500 x .625	58-60
66	1	A-2	.400 x .660 x .750	58-60
65	1	CD650	.250 x .350 x .7707	–
64	1	CD650	.250 x .350 x .7717	–
63	1	A-2	.500 x .500 x .625	58-60
62	1	A-2	.400 x .530 x .750	58-60
61	1	CD650	.250 x .480 x .7806	–
60	1	CD650	.250 x .480 x .780	–
59	1	A-2	.500 x .500 x .625	58-60
58	1	A-2	.149 x .399 x .750	58-60
57	1	CD650	.400 x .710 x .7682	–
56	1	A-2	.400 x .500 x .625	58-60
55	1	A-2	.100 x .398 x 1.709	58-60
54	1	A-2	.400 x .600 x .636	58-60
53	1	CD650	.2507 x .5967 x .650	–
52	1	CD650	.1493 x .650 x .795	–
51	1	CD650	.1983 x .2507 x .650	–
50	1	A-2	.400 x .400 x .600	58-60
49	1	A-2	.750 x 6.000 x 8.200	58-60
48	1	A-2	.750 x 8.000 x 8.200	58-60
47	1	A-2	.149 x .399 x .750	58-60
46	1	CD650	.400 x .750 x .880	–
45	1	A-2	.400 x .500 x .625	58-60
44	1	A-2	.300 x .430 x .750	58-60
43	1	CD650	.400 x .500 x .750	–
42	1	A-2	.400 x .500 x .625	58-60
41	1	A-2	.149 x .399 x .750	58-60
40	1	CD650	.400 x .750 x .880	–
39	1	A-2	.400 x .500 x .625	58-60
38	1	A-2	.149 x .399 x .750	58-60
37	1	CD650	.400 x .750 x .880	–
36	1	A-2	.400 x .500 x .625	58-60
35	1	A-2	.750 x 5.000 x 8.000	58-60
34	1	A-2	.750 x 5.000 x 6.000	58-60
33	1	A-2	.100 x .398 x 1.373	58-60
32	1	CD650	.200 x .650 x 1.375	–
31	1	CD650	.200 x .650 x 1.375	–
30	1	A-2	.400 x .500 x .625	58-60
29	1	M-2	.1998 x .2517 x .750	60-62
28	1	M-2	.0638 x .1472 x .750	60-62
27	1	CD650	.400 x .460 x .762	–
26	1	A-2	.400 x .500 x .625	58-60
25	1	CD650	.400 x .470 x .750	–
24	1	A-2	.100 x .398 x .998	58-60
23	1	CD650	.200 x .650 x 1.000	–
22	1	CD650	.200 x .650 x 1.000	–
21	1	CD650	.200 x .750 x 1.000	–
20	1	CD650	.200 x .750 x 1.000	–
19	1	A-2	.149 x .399 x .750	58-60
18	1	CD650	.050 x .200 x .750	–
17	1	CD650	.200 x .605 x .750	–
16	1	CD650	.200 x .605 x .750	–
15	1	A-2	.400 x .500 x .625	58-60
14	1	A-2	.149 x .399 x .750	58-60
13	1	CD650	.400 x .605 x .756	–
12	1	A-2	.400 x .500 x .625	58-60
11	1	A-2	.100 x .398 x 1.248	58-60
10	1	CD650	.200 x .650 x 1.250	–
9	1	CD650	.200 x .650 x 1.250	–
8	1	A-2	.375"ø x .625" Lg.	58-60
7	1	Pur.	1/2-20 Unified Scr. Plug	–
6	1	Pur.	3/8"ø Sprg. Cat.#9-0604-26	1.0Lg
5	1	CD650	.300 x .756 x 1.750	–
4	1	A-2	.125 x .839 x 8.300	58-60
3	1	A-2	.750 x 8.000 x 8.300	58-60
2	1	A-2	.750 x 6.000 x 8.300	58-60
1	1	Pur.	Die Set (See Data)	–
DET.	REQ'D	MAT'L	FINISHED SIZE	Rc

Advanced Designs, Inc.
Powers Lake, Wis.

CUST.

Your Customer

CAD FILE:	CONTACT-43	DATE	SHT. NO. 43 of 43
DRAWN BY:	M. Dennis	05-17-08	
CHECKED:	M. Dennis	05-17-08	SCALE 1 = 1
APPROVED:	–	02-01-06	
PART NO.	87654321		TOOL NO. 05-500
PART NAME	Contact, Changeover		

www.diedesigner.com